71717-00002.G

Communication and power supply unit for motorised fire dampers

- **Communication via Modbus RTU (RS-485)**
- **AC 230 V supply via Euro plug**
- **Power is supplied to the actuators via terminal connection (AC 230 V)**
- **Simple integration of a smoke detector with no additional power supply is possible**
- **Suitable actuators: BFA230.., BF230.., BFN230.., BFL230..**

Technical data

Electrical data	Nominal voltage	AC 230 V, 50/60 Hz
	Nominal voltage range	AC 198...264 V
	Power consumption In operation For wire sizing	3.5 W (operating position, incl. actuator) 14 VA (incl. actuator)
	Connections	See "Connections" on page 2
	Modbus	
	Protocol	Modbus RTU
	Medium	RS-485
	Transmission formats	1-8-N-2, 1-8-N-1, 1-8-E-1, 1-8-O-1 Default: 1-8-N-2 (Start bits, Data bits, Parity, Stop bits)
	Number of nodes	Max. 64 (without repeater)
	Baud rates	9,600, 19,200, 38,400, 76,800 Bd Default: 38,400 Bd
	Addresses	1...247, values over 247 are interpreted as 247, 0 = Broadcast
	Bus termination	150 Ω, can be switched if necessary
Safety	Protection class	**II** Protective insulated ⧈
	Degree of protection	IP40
	EMC Low-voltage-directive	CE according to 2004/108/EC CE according to 2006/95/EC
	Mode of operation	Type 1 (EN 60730-1)
	Rated impulse voltage	2.5 kV (EN 60730-1)
	Control pollution degree	2 (EN 60730-1)
	Ambient temperature	−20...+50°C
	Non-operating temperature	−40...+80°C
	Humidity test	95% r.h., non-condensing (EN 60730-1)
	Maintenance	Maintenance-free
Dimensions / Weight	Dimensions	See "Dimensions" on page 5
	Weight	Approx. 400 g

Safety notes

- **The device has been designed for use in stationary heating, ventilation and air-conditioning systems and is not allowed to be used outside the specified field of application, especially in aircraft or in any other airborne means of transport.**
- **Only authorised specialists may carry out installation. All applicable legal or institutional installation regulations must be complied with during installation.**
- **The device may only be opened at the manufacturer's site. It does not contain any parts that can be replaced or repaired by the user.**
- **The device contains electrical and electronic components and is not allowed to be disposed of as household refuse. All locally valid regulations and requirements must be observed.**

Product features

Application

The BKN230-MOD is installed with the motorised fire damper. This unit sets up the communication connection with higher-level systems. The actuator is connected to a terminal connection for AC 230 V.

Product features

Parameterisation (DIL switch)

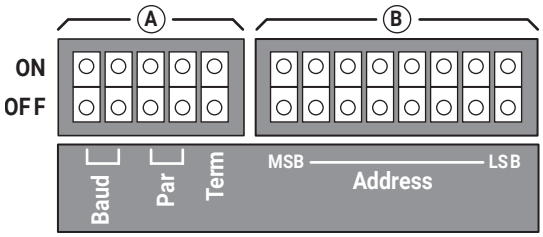

A

Baud rate		
9,600	OFF	OFF
19,200	OFF	ON
38,400	ON	OFF
76,800	ON	ON

Parity		
1-8-N-2	OFF	OFF
1-8-N-1	OFF	ON
1-8-E-1	ON	OFF
1-8-O-1	ON	ON

Termination	
OFF	OFF
Modbus with 150 Ω	ON

B

Modbus address								
1	OFF	OFF	OFF	OFF	OFF	OFF	OFF	ON
2	OFF	OFF	OFF	OFF	OFF	OFF	ON	OFF
3	OFF	OFF	OFF	OFF	OFF	OFF	ON	ON
...								
247	ON	ON	ON	ON	OFF	ON	ON	ON

Test run / fault acknowledgement

Press the button for longer than one second to trigger the following functions:
a) starts test run
b) resets a current error message

Expansion options

A BAE...ST thermoelectric tripping device and/or an optoelectronic smoke detector can be connected directly without add-on devices. If a smoke or temperature alarm is tripped, the local damper immediately moves into the safety position and sends a corresponding message to the higher-level system.

Local override control

If no control commands are received by the BKN230-MOD or if no communication line is connected, the damper remains in the safety position. However, the damper can still move into the operating position by means of the wire bridge (Terminal 1 to 4) as soon as power supply voltage is applied. The BKN230-MOD can thus be used without a control system, for example if the damper needs to be continuously open without remote monitoring. The local safety function of thermoelectric tripping devices and smoke detectors is not affected. The actual position of the damper is displayed by the LEDs in the device. On-site damper test using the test key is possible.
In the case of override control (terminal 1+4), stored thermoelectric tripping device / smoke detector faults must first be reset before the damper can be started up. The reset is executed via test button (test run / fault acknowledgement).

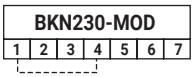

Electrical installation

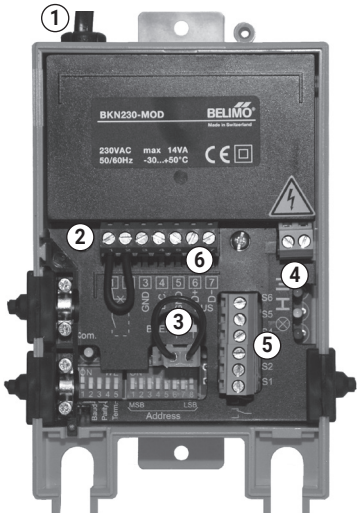

① **Halogen-free power supply cable and plug, AC 230 V**

② **Connecting terminals for**
1 External smoke detector, +24 V, max. 50 mA
2 External smoke detector, control input
3 GND
4 BKN Direct Control, override control input
5 Modbus GND
6 Modbus D+
7 Modbus D–

③ **Tab connection for**
BAE.. thermoelectric tripping device

④ **Connecting terminals for**
BELIMO damper actuator (motor AC 230 V)
1 = N (blue)
2 = L1 (brown)

⑤ **Connecting terminals for**
BELIMO damper actuator (limit switch)
1 ... 6 = S1 ... S6

Modbus wiring

⑥

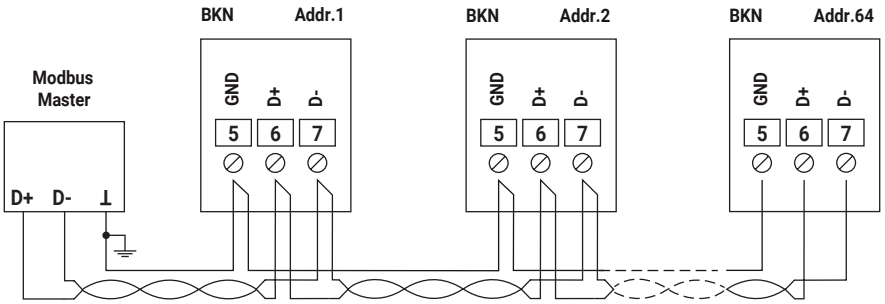

Modbus-GND
Implementation of the bus wiring in 3-wire format is mandatory. The GND must be connected to the protective earth of the control cabinet.

The wiring of Modbus RTU / RS485 is to be carried out in accordance with applicable regulations (www.modbus.org). The device has switchable resistors for bus termination.

Indicators and operating elements

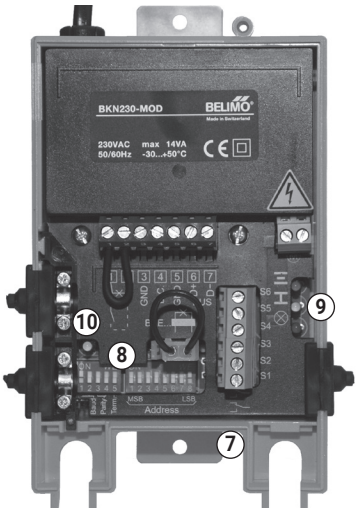

⑦ **Button** (see "Test run / fault acknowledgement" above)

⑧ **DIL switch** (see "Parameterisation" above)

⑨ **LEDs status signalisation BELIMO damper actuator:**

Green	On	Upper limit switch (damper open)
	blinking	Damper opens (motor is actuated)
Yellow	On	Lower limit switch (damper closed)
	blinking	Damper closes (motor is not actuated)
Red	On	Internal device fault (BKN)
	blinking	External fault = BAE or smoke sensor triggered, nominal position not reached
	flashing	External fault = If an error is stored (i.e. no longer pending, but not yet acknowledged), then this is displayed on the device by a periodic flash of the red LED.

⑩ **LED Modbus communication:**

Yellow	flickering	Modbus communication is illuminated during RX and TX

Signalisation

Lower limit position (Damper CLOSED) not reached:	Upper limit position (Damper OPEN) not reached:
LED red blinking LED green blinking LED yellow off	LED red blinking LED green off LED yellow blinking
Signal via LED after 2:30 min	Signal via LED after 2:30 min

Modbus overview

Register

	No.	Adr	Register
In operation	1	0	–
	2	1	**Override control**
	3	2	**Command**
	4	3	Actuator type
	5	4	Relative position [%]
	6	5	–
	7	6	–
	8	7	–
	9	8	Collective fault
Service	101	100	Series number 1st part
	102	101	Series number 2nd part
	103	102	Series number 4th part
	104	103	Firmware version (Modbus module)
	105	104	Malfunction and service information
	106	105	–
	107	106	–
	108	107	–
	109	108	**Bus fail position**

- Registers in Bold can be written
- Registers <100 (In operation) which can be written are non-permanent and should therefore be updated periodically
- Registers >100 which can be written are permanent

Commands

All data is arranged in a table and addressed by 1..n (register) or 0..n-1 (address). No distinction is made between data types (Discrete Inputs, Coils, Input Registers, Holding Registers). As a consequence, all data can be accessed with the two commands for Holding Register. The commands for Discrete Inputs and Input Registers can be used as an alternative.

Note regarding Read Discrete Inputs
The command reads one or more bits and can alternatively be applied for reading the malfunction and service information in Register 105 (Adr 104). The Start address for "BAE (duct temperature sensor) triggered" is calculated with
104 * 16 + 6 = 1670

Standard commands:
Read Holding Registers [3]
Write Single Register [6]

Optional commands:
Read Discrete Inputs [2]
Read Input Registers [4]
Write Multiple Registers [16]

Modbus register description

Register 2: Override control

Overriding the setpoint with defined compulsions

Override control	
0	None (initial value, cannot be written)
1	Open
2	Close

Note
If no override is set (value 0), then the fire damper remains in safety position (Closed).

Register 3: Command

Initiation of actuator functions for service and test; the register is reset automatically.

Command	
0	None
2	Test run
4	Reset faults

Register 4: Actuator type

Actuator type	
3	Fire damper actuator

Register 5: Relative position

Position in accordance with position indicator switches
Damper closed: 0 (0%)
Intermediate switching: 5,000 (50%)
Damper open: 10,000 (100%)

Register 9: Collective fault

0 = no fault
1 = fault
Fault is set when one of the bits 0...7 of Register 105 is set.
(used as sensor value for air/water/VAV)

Modbus register description

Register 101, 103: Series number

Each node has an unambiguous series number. The series number consists of 4 segments, although only parts 1, 2 and 4 are displayed on Modbus.
Example: 00839-31324-064-008

Register 9	Register 10	Register 11
1st part	2nd part	4th part
00839	31234	008

Register 104: Firmware Version

Firmware Version (VX.XX)
e.g. 101 V1.01

Register 105: Malfunction and service information

The status information is split into messages about the actuator (malfunctions) and other service information.

	bit	Description
Malfunctions (low byte)	0	–
	1	Actuation path increased
	2	Mechanical overload
	3	–
	4	Safety-relevant malfunction
	5	–
	6	Duct temperature too high
	7	Smoke detector triggered
Service (high byte)	8	Internal activity (test run, adaption, ...)
	9	–
	10	Bus monitoring triggered
	11	Local override control active
	12	–
	13	–
	14	–
	15	–

The malfunction bits can be reset with Register 3 (command 4). Malfunction 4 cannot be reset.

Register 109: Bus fail position

The bus monitoring controls the Modbus communication. If the override control (Register 2) is not renewed within 300 seconds, the actuator controls to the bus fail position (closed).
Triggered bus monitoring is indicated in Register 105.

Bus fail position	
0	No bus monitoring
1	Rapid close if time is exceeded (factory setting)

Dimensions [mm]
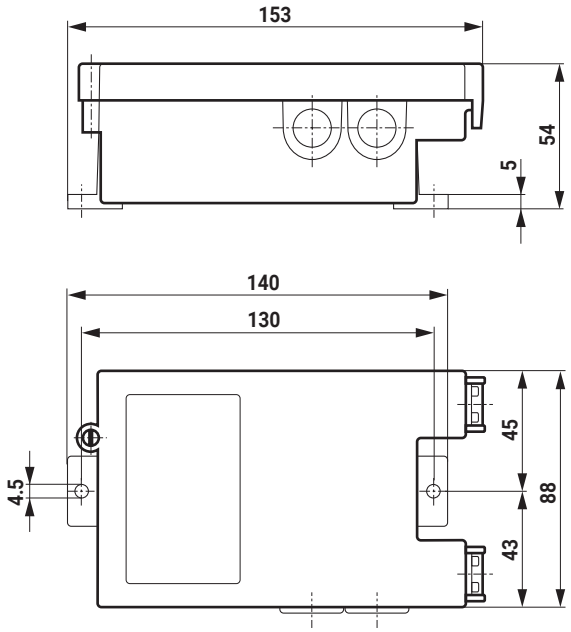
Dimensional drawings