Characterised control valve with sensor-operated flow control with fail-safe, 2-way, Internal and external thread, PN 25 (EPIV)

- Nominal voltage AC/DC 24 V
- Control modulating, communicative, hybrid
- For closed water systems
- For modulating control of air-handling and heating systems on the water side
- Communication via BACnet MS/TP, Modbus RTU, Belimo-MP-Bus or conventional control
- Conversion of active sensor signals and switching contacts
- Measurement of the fluid temperature
- Glycol monitoring

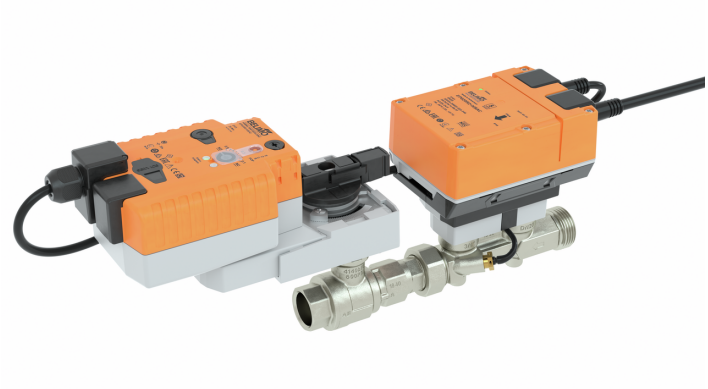

Picture may differ from product

Type Overview

Type	DN	Rp ["]	G ["]	V'nom [l/s]	V'nom [l/min]	V'nom [m³/h]	Kvs theor. [m³/h]	PN
EP015R2+KBAC	15	1/2	3/4	0.42	25	1.5	3.2	25
EP020R2+KBAC	20	3/4	1	0.69	41.7	2.5	5.3	25
EP025R2+KBAC	25	1	1 1/4	0.97	58.3	3.5	8.8	25
EP032R2+KBAC	32	1 1/4	1 1/2	1.67	100	6	14.1	25
EP040R2+KBAC	40	1 1/2	2	2.78	166.7	10	19.2	25
EP050R2+KBAC	50	2	2 1/2	4.17	250	15	30.4	25

Kvs theor.: theoretical Kvs value for pressure drop calculation

Technical data

Electrical data	Nominal voltage	AC/DC 24 V
	Nominal voltage frequency	50/60 Hz
	Nominal voltage range	AC 19.2...28.8 V / DC 21.6...28.8 V
	Power consumption in operation	4 W (DN 15...25) 5 W (DN 32...50)
	Power consumption in rest position	3.7 W (DN 15...25) 3.9 W (DN 32...50)
	Power consumption for wire sizing	6.5 VA (DN 15...25) 7.5 VA (DN 32...50)
	Connection supply / control	Cable 1 m, 6x 0.75 mm²
	Cable length	1 m
Data bus communication	Communicative control	BACnet MS/TP Modbus RTU MP-Bus
	Number of nodes	BACnet / Modbus see interface description MP-Bus max. 8
	MP-Bus compatibility mode	If the device is used as a EP..R-(K)MP replacement in an existing MP-Bus system, the unit can be set to the MP compatibility mode. The existing MP client will recognise the device as former EPIV device. The compatibility mode shall not be used for new projects.
Functional data	Operating range Y	2...10 V
	Operating range Y variable	0.5...10 V
	Position feedback U	2...10 V
	Position feedback U note	Max. 1 mA
	Position feedback U variable	0...10 V 0.5...10 V

Technical data

Functional data	Setting fail-safe position	NC/NO or adjustable 0...100% (POP rotary knob)
	Running time fail-safe	35 s / 90°
	Sound power level motor	45 dB(A)
	Sound power level, fail-safe	61 dB(A)
	V'max adjustable	25...100% of V'nom
	Control accuracy	±5% (of 25...100% V'nom)
	Control accuracy note	±10% (of 25...100% V'nom) @ Glycol 0...60% vol.
	Min. controllable flow	1% of V'nom
	Configuration	via NFC, Belimo Assistant 2
	Fluid	Water, water with glycol up to max. 60% vol.
	Fluid temperature	-10...120°C [14...248°F]
	Fluid temperature note	At a fluid temperature of -10...2°C, a stem heater or a valve neck extension is recommended.
	Close-off pressure	Δps 1400 kPa
	Differential pressure	Δpmax 350 kPa
	Differential pressure note	200 kPa for low-noise operation
	Flow characteristic	equal percentage (VDI/VDE 2173), optimised in the opening range
	Flow characteristic note	switchable to linear (VDI/VDE 2173)
	Leakage rate	air-bubble tight, leakage rate A (EN 12266-1)
	Pipe connection	Internal and external thread
	Installation orientation	upright to horizontal (in relation to the spindle)
	Servicing	maintenance-free
	Manual override	with push-button
Measuring data	Measured values	Flow Fluid temperature in valve unit
	Temperature sensor	Pt1000 - EN 60751, 2-wire technology, inseparably connected integrated in flow sensor
Temperature measurement	Measuring accuracy absolute temperature	±0.35°C @ 10°C [±0.65°F @ 50°F] (Pt1000 EN60751 Class B) ±0.6°C @ 60°C [±1.1°F @ 140°F] (Pt1000 EN60751 Class B)
Flow measurement	Measuring principle	Ultrasonic flow measurement
	Measuring accuracy flow	±2%, according to class 2 EN 1434, glycol 0% vol.
	Measuring accuracy flow note	@ 15...120°C Inlet section ≥0x DN (EN 1434-4:2022) ±5% (of 20...100% V'nom) @ glycol 0...60% vol.
	Min. flow measurement	0.2% of V'nom
Glycol monitoring	Measurement display glycol	0...60%
	Measuring accuracy glycol monitoring	±4%
Safety data	Protection class IEC/EN	III, Protective Extra-Low Voltage (PELV)
	Degree of protection IEC/EN	IP54
	Pressure equipment directive	CE according to 2014/68/EU
	EMC	CE according to 2014/30/EU
	Certification IEC/EN	IEC/EN 60730-1:11 and IEC/EN 60730-2-15:10
	Quality Standard	ISO 9001

Technical data

Safety data	Type of action	Type 1.AA
	Rated impulse voltage supply / control	0.8 kV
	Pollution degree	3
	Ambient humidity	Max. 95% RH, non-condensing
	Ambient temperature	-30...50°C [-22...122°F]
	Storage temperature	-40...80°C [-40...176°F]
Materials	Valve body	Nickel-plated brass body
	Body finish	nickel-plated
	Flow measuring pipe	Nickel-plated brass body
	Closing element	Stainless steel
	Spindle	Stainless steel
	Spindle seal	EPDM O-ring
Terms	Abbreviations	POP = Power off position / fail-safe position

Safety notes

- This device has been designed for use in stationary heating, ventilation and air-conditioning systems and must not be used outside the specified field of application, especially in aircraft or in any other airborne means of transport.
- Outdoor application: Only possible if no (sea) water, snow, ice, sunlight or aggressive gases act directly on the device and if it is ensured that the ambient conditions remain within the limit values specified in the data sheet at all times.
- Only authorised specialists may carry out installation. All applicable legal or institutional installation regulations must be complied with during installation.
- The device contains electrical and electronic components and must not be disposed of as household refuse. All locally valid regulations and requirements must be observed.

Product features

Operating mode

The HVAC performance device is comprised of three components: characterised control valve (CCV), measuring pipe with flow sensor and the actuator itself. The adjusted maximum flow (V'max) is assigned to the maximum control signal (typically 100%). The HVAC performance device can be controlled via communicative signals. The fluid is detected by the sensor in the measuring pipe and is applied as the flow value. The measured value is balanced with the setpoint. The actuator corrects the deviation by changing the valve position. The angle of rotation α varies according to the differential pressure through the control element (see flow curves).

With the supply voltage the integrated capacitors will be charged.

Interrupting the supply voltage causes the valve to be moved to the selected fail-safe position by means of stored electrical energy.

Calibration certificate

There is a calibration certificate available in the Belimo Cloud for each device. If needed, it can be downloaded as a PDF through Belimo Assistant 2.

Flow rate curves

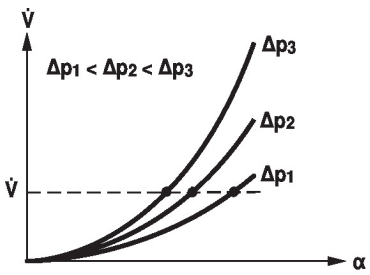

Product features

Pre-charging time (start up)

The capacitor actuators require a pre-charging time. This time is used for charging the capacitors up to a usable voltage level. This ensures that, in the event of a power failure, the actuator can move at any time from its current position into the preset fail-safe position. The duration of the pre-charging time depends mainly on how long the power was interrupted.

Typical pre-charging time

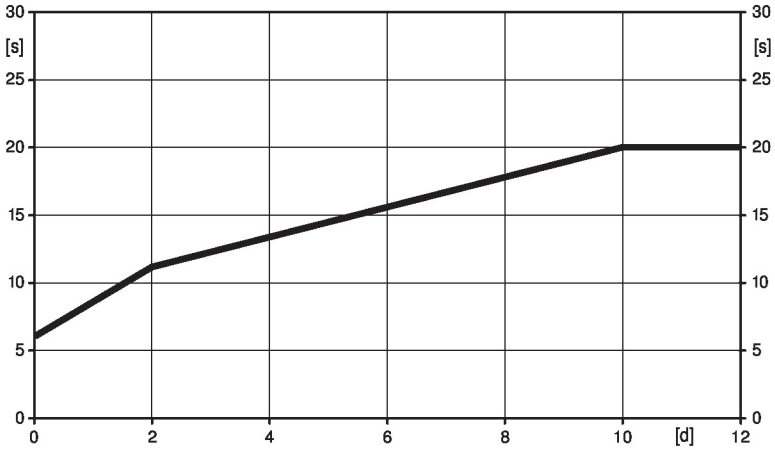

[d] = Power failure in days
[s] = Pre-charging time in seconds

	[d]				
	0	1	2	7	≥10
[s]	6	9	11	16	20

Delivery condition (capacitors)

The actuator is completely discharged after delivery from the factory, which is why the actuator requires approximately 20 s pre-charging time before initial commissioning in order to bring the capacitors up to the required voltage level.

Setting fail-safe position

The rotary knob fail-safe position can be used to adjust the desired fail-safe position 0...100% in 10% increments. The rotary knob always refers to the adapted angle of rotation range. In the event of a power failure, the actuator will move into the selected fail-safe position.

Product features

Control characteristics

The fluid velocity is measured in the measuring component (sensor electronics) and converted to a flow rate signal.

The control signal Y corresponds to the power Q via the exchanger, the flow is controlled in the EPIV. The control signal Y is converted into an equal-percentage characteristic curve and provided with the V'max value as the new reference variable w. The momentary control deviation forms the control signal Y1 for the actuator.

The specially configured control parameters in connection with the precise flow sensor ensure a stable quality of control. They are, however, not suitable for rapid control processes, such as for domestic water control. U5 displays the measured flow as voltage (factory setting).

Configuring V'max with Belimo Assistant 2:

U5 refers to the respective V'nom, i.e. if V'max is e.g. 50% of V'nom, then Y = 10 V, U5 = 5 V.

As an alternative, U5 can be used for displaying the valve opening angle (position) or the fluid temperature.

1. Standard equal percentage V'max = V'nom / 2. effect V'max < V'nom

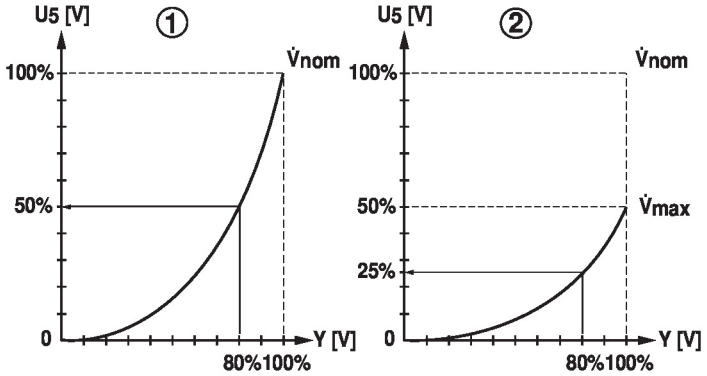

Flow control

V'nom is the maximum possible flow.

V'max is the maximum flow rate which has been set with the highest control signal DDC. V'max can be set between 25% and 100% of V'nom.

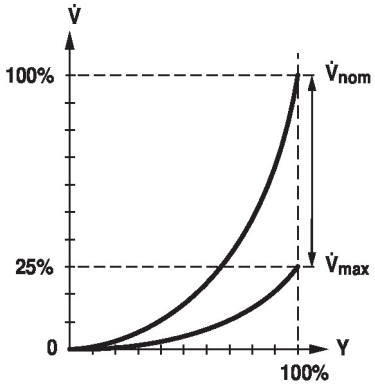

Fluid temperature measurement

By means of the temperature sensor integrated in the flow sensor, the fluid temperature is permanently measured. The measured value can be read via the bus system or the analogue feedback signal U. The current measured value is also displayed in Belimo Assistant 2.

Product features

Creep flow suppression

Given the very low flow speed in the opening point, this can no longer be measured by the sensor within the required tolerance. This range is overridden electronically.

Opening valve

The valve remains closed until the flow required by the control signal DDC corresponds to 1% of V'nom. The control along the flow characteristic is active after this value has been exceeded.

Closing valve

The control along the flow characteristic is active up to the required flow rate of 1% of V'nom. Once the level falls below this value, the flow rate is maintained at 1% of V'nom. If the level falls below the flow rate of 0.5% of V'nom required by the control signal DDC, then the valve will close.

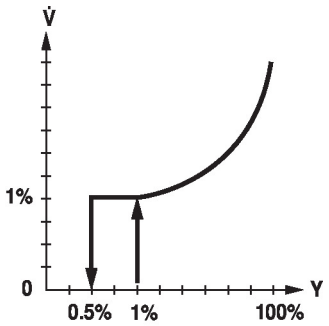

Converter for sensors

Connection option for a sensor (active or with switching contact). In this way, the analogue sensor signal can be easily digitised and transferred to the bus systems BACnet, Modbus or MP-Bus.

Control signal inversion

This can be inverted in cases of control with an analogue control signal. The inversion causes the reversal of the standard behaviour, i.e. at a control signal of 0%, regulation is to V'max, and the valve is closed at a control signal of 100%.

Hydronic balancing

With the Belimo tools, the maximum flow rate (equivalent to 100% requirement) can be adjusted on-site, simply and reliably, in a few steps. If the device is integrated in the management system, then the balancing can be handled directly by the management system.

Combination analogue - communicative (hybrid mode)

With conventional control by means of an analogue control signal DDC, BACnet, Modbus or MP-Bus can be used for the communicative position feedback.

Patented glycol compensation

Glycol changes the viscosity of the heat transfer fluid and as a result affects the measured volumetric flow. Without glycol compensation, volumetric flow measurements can show errors of as much as 30 percent. The patented automatic glycol compensation significantly reduces the degree of measurement error.

Selection of the fluid used:

– Water
– Propylene glycol
– Ethylene glycol
– Antifrogen L
– Antifrogen N
– DowCal 200
– DowCal 100

Determining the glycol concentration requires recurring temperature changes of min. 2 K within the flow sensor during operation. Installing the flow sensor in the temperature-variable part of the system is recommended to ensure these temperature changes.

Error readout with analogue feedback signal

If the sensor cannot measure the flow due to a sensor error, this is indicated by 0.3 V at the position feedback U. This is only the case if the analogue position feedback U is set to flow and the lower value of the signal range is 0.5 V or more.

Manual override

Manual control with push-button possible - temporary. The gear train is disengaged and the actuator decoupled for as long as the button is pressed.

Product features

High functional safety The actuator is overload protected, requires no limit switches and automatically stops when the end stop is reached.

Parts included

Description	Type
Insulation shell for EPIV / Belimo Energy Valve™ DN 15...25	Z-INSH15
Insulation shell for EPIV / Belimo Energy Valve™ DN 32...50	Z-INSH32

Insulation shell not included in Asia Pacific

Accessories

Tools

Description	Type
Service tool for wired and wireless setup, on-site operation and troubleshooting.	Belimo Assistant 2
Belimo Assistant Link Bluetooth and USB to NFC and MP-Bus converter for configurable and communicative devices	LINK.10

Mechanical accessories

Description	Type
Insulation shell for EPIV / Belimo Energy Valve™ DN 15...25	Z-INSH15
Insulation shell for EPIV / Belimo Energy Valve™ DN 32...50	Z-INSH32
Valve neck extension for ball valve DN 15...50	ZR-EXT-01
Pipe connector for ball valve with internal thread DN 15 Rp 1/2"	ZR2315
Pipe connector for ball valve with internal thread DN 20 Rp 3/4"	ZR2320
Pipe connector for ball valve with internal thread DN 25 Rp 1"	ZR2325
Pipe connector for ball valve with internal thread DN 32 Rp 1 1/4"	ZR2332
Pipe connector for ball valve with internal thread DN 40 Rp 1 1/2"	ZR2340
Pipe connector for ball valve with internal thread DN 50 Rp 2"	ZR2350
Pipe connector for EPIV / Energy valve with external thread DN 15 Rp 1/2", G 3/4"	ZREV15F
Pipe connector for EPIV / Energy valve with external thread DN 20 Rp 3/4", G 1"	ZREV20F
Pipe connector for EPIV / Energy valve with external thread DN 25 Rp 1", G 1 1/4"	ZREV25F
Pipe connector for EPIV / Energy valve with external thread DN 32 Rp 1 1/4", G 1 1/2"	ZREV32F
Pipe connector for EPIV / Energy valve with external thread DN 40 Rp 1 1/2", G 2"	ZREV40F
Pipe connector for EPIV / Energy valve with external thread DN 50 Rp 2", G 2 1/2"	ZREV50F

Electrical installation

⚠ Supply from isolating transformer.

Parallel connection of other actuators possible. Observe the performance data.

The wiring of the line for BACnet MS/TP / Modbus RTU is to be carried out in accordance with applicable RS-485 regulations.

Modbus / BACnet: Supply and communication are not galvanically isolated. COM and ground of the devices must be connected to each other.

Sensor connection: An additional sensor can optionally be connected to the flow sensor. This can be an active sensor with output DC 0...10 V (max. DC 0...32 V with resolution 30 mV) or a switching contact (switching current min. 16 mA @ 24 V). Thus the analogue signal of the sensor can be easily digitised with the flow sensor and transferred to the corresponding bus system.

Analogue output: An analogue output (wire 5) is available on the flow sensor. It can be selected as 0...10 V, 0.5...10 V, 2...10 V or user defined. For example, the flow rate or the temperature of the temperature sensor (Pt1000 - EN 60751, 2-wire technology) can be output as an analogue value.

Electrical installation

Wire colours:
1 = black
2 = red
3 = white
5 = orange
6 = pink
7 = grey

Functions:
C1 = D- (wire 6)
C2 = D+ (wire 7)

AC/DC 24 V, modulating

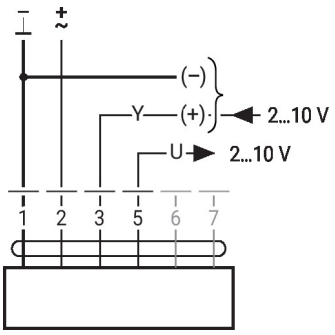

Modbus RTU / BACnet MS/TP with analogue setpoint (hybrid operation)

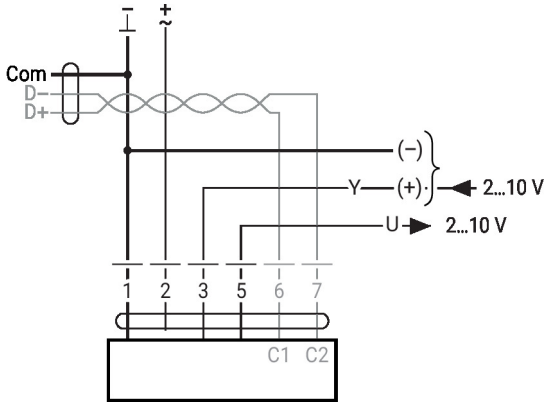

BACnet MS/TP / Modbus RTU

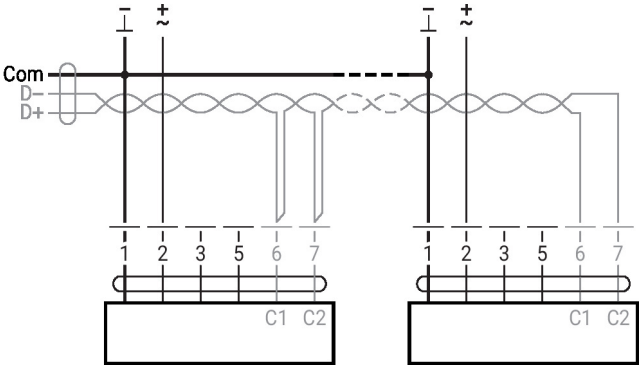

MP-Bus

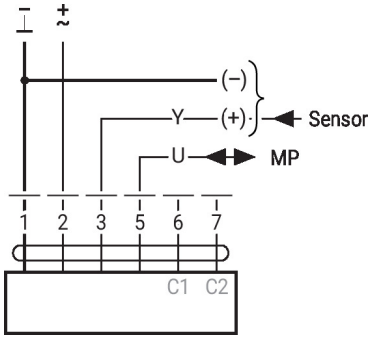

Converter for sensors

Connection with switching contact, e.g. differential pressure switch

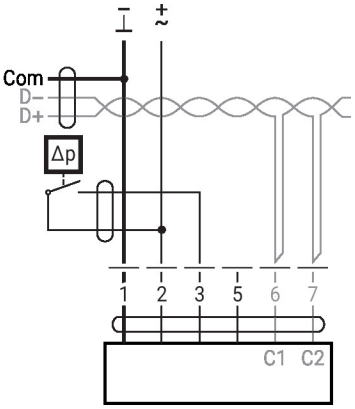

Switching contact requirements:
The switching contact must be able to switch a current of 16 mA at 24 V accurately.

Electrical installation

Converter for sensors

Connection with active sensor, e.g. 0...10 V @ 0...50°C

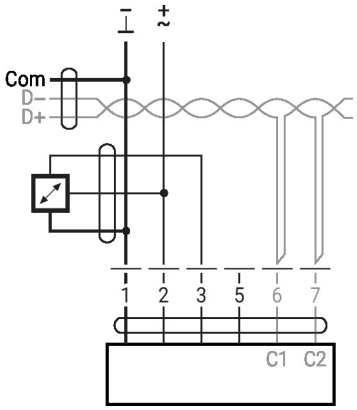

Possible voltage range: 0...32 V
Resolution 30 mV

Further electrical installations

Functions with specific parameters (configuration necessary)

Override control and limiting with AC 24 V with relay contacts (with conventional control or hybrid mode)

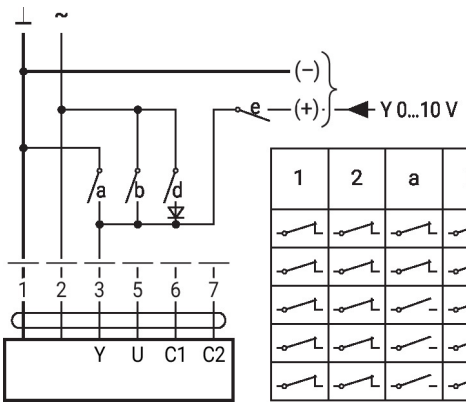

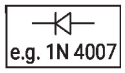

1	2	a	b	d	e		Inv.
						Close[1]	Open[1]
						V'_{min} [2]	V'_{max} [2]
						V'_{max}	V'_{max}
						Open	Open
						Y	Y

1) Position control
2) Flow control
Inv. = control signal inverted

Override control and limiting with DC 24 V with relay contacts (with conventional control or hybrid mode)

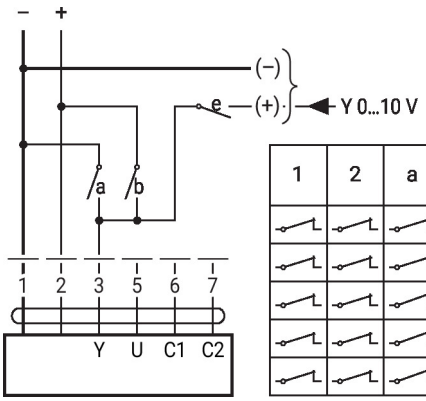

1	2	a	b	e		Inv.
					Close[1]	Open[1]
					V'_{min} [2]	V'_{max} [2]
					Y	Y
					Open[1]	Open[1]
					V'_{max} [2]	V'_{max} [2]

1) Position control
2) Flow control
Inv. = control signal inverted

Further electrical installations

Functions with specific parameters (configuration necessary)

Control 3-point with AC 24 V

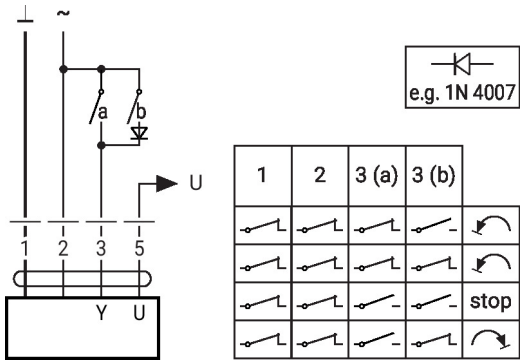

Position control: 90° = 100 s
Flow control: Vmax = 100 s

BACnet MS/TP / Modbus RTU with analogue setpoint (hybrid mode)

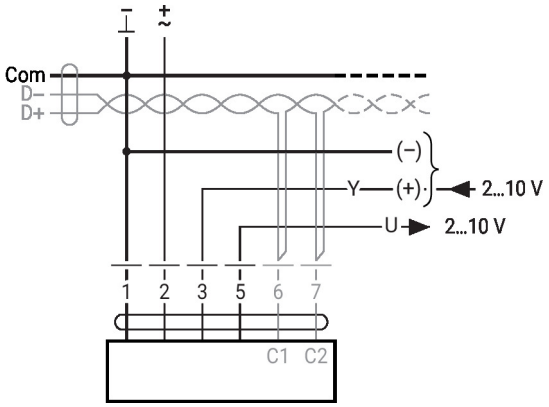

MP-Bus, supply via 3-wire connection

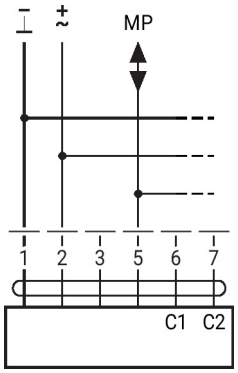

MP-Bus via 2-wire connection, local power supply

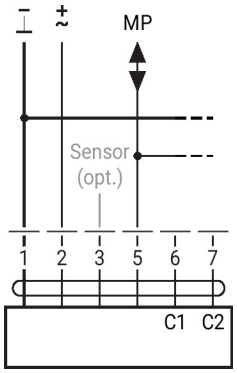

Operating controls and indicators

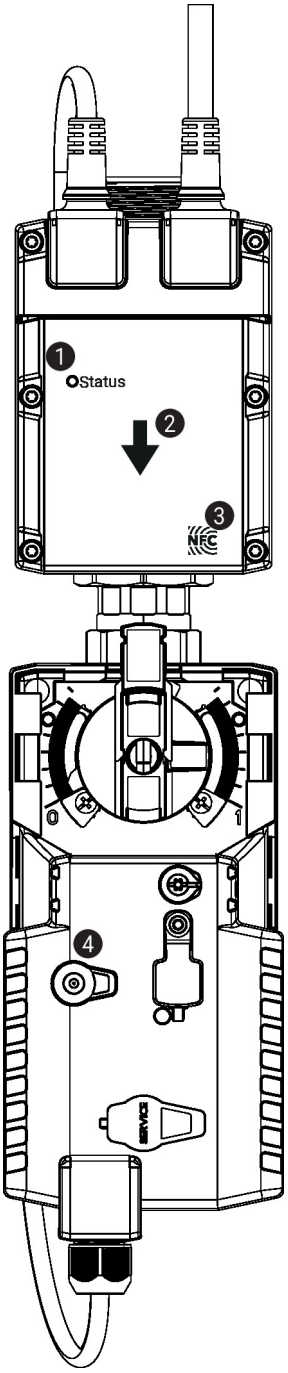

1 LED display green

On:	Device starting up
Off:	No power supply or wiring error
Flashing:	In operation (voltage ok)

2 Flow direction

3 NFC interface

4 Manual override button

Press button:	Gear train disengages, motor stops, manual override possible
Release button:	Gear train engages, standard mode. Device performs synchronisation.

Operating controls and indicators

Setting fail-safe position

Setting fail-safe position (POP)

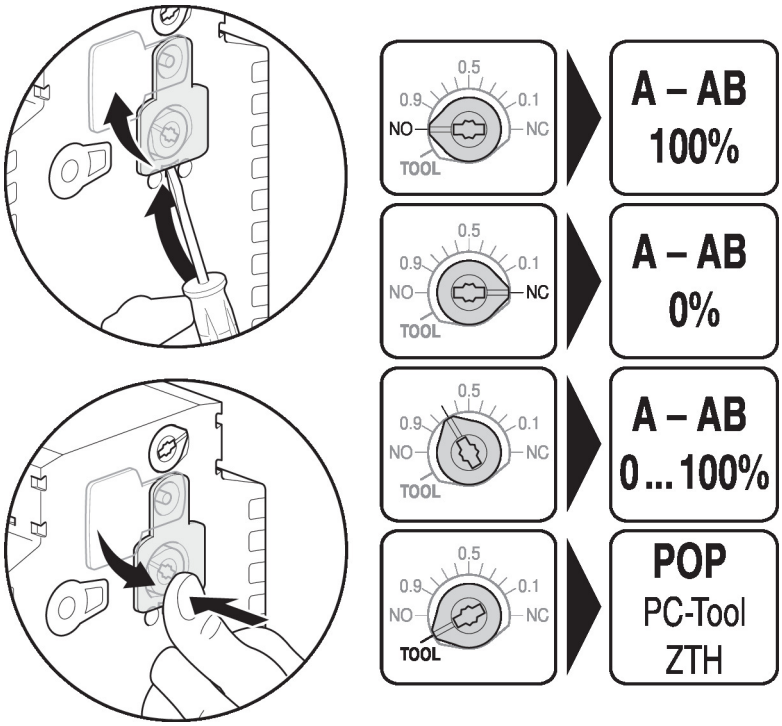

Installation notes

Permissible installation orientation

The ball valve can be installed upright to horizontal. The ball valve may not be installed in a hanging position, i.e. with the spindle pointing downwards.

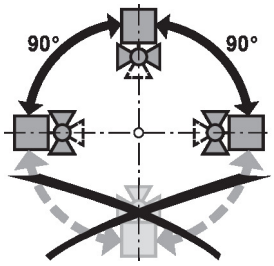

Installation location in return

Installation in the return is recommended.

Water quality requirements

The water quality requirements specified in VDI 2035 must be adhered to.

Belimo valves are regulating devices. For the valves to function correctly in the long term, they must be kept free from particle debris (e.g. welding beads during installation work). The installation of a suitable strainer is recommended.

Servicing

Ball valves, rotary actuators and sensors are maintenance-free.

Before any service work on the control element is carried out, it is essential to isolate the rotary actuator from the power supply (by unplugging the electrical cable if necessary). Any pumps in the part of the piping system concerned must also be switched off and the appropriate slide valves closed (allow all components to cool down first if necessary and always reduce the system pressure to ambient pressure level).

The system must not be returned to service until the ball valve and the rotary actuator have been correctly reassembled in accordance with the instructions and the pipeline has been refilled by professionally trained personnel.

Flow direction

The direction of flow, specified by an arrow on the housing, is to be complied with, since otherwise the flow rate will be measured incorrectly.

Installation notes

Inlet section

A flow calming section or inlet section in the direction of the flow must be maintained in front of the flow sensor to achieve the specified measuring accuracy.

According to EN 1434-4:2022 (out-of-plane double 90° bends), an inlet section of 0x DN is applicable. In all other cases, EN 1434-6:2022, Annex A.4, recommends an inlet section of ≥5x DN. See also the Belimo application information on the inlet section according to EN 1434.

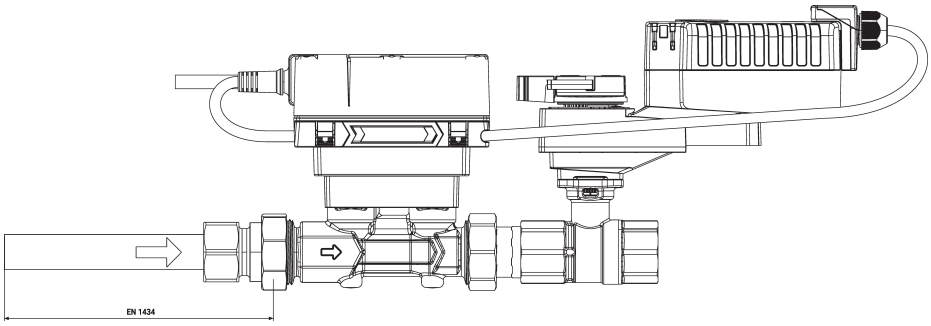

Split installation

The valve-actuator combination may be mounted separately from the flow sensor. The direction of flow of both components must be observed.

General notes

Valve selection

The valve is determined using the maximum required flow rate V'max.

A calculation of the Kvs value is not required.

V'max = 30...100% of V'nom

If no hydronic data is available, the same valve DN can be selected as the heat exchanger nominal diameter.

Minimum differential pressure (pressure drop)

The minimum required differential pressure (pressure drop through the valve) for achieving the desired flow V'max can be calculated with the aid of the theoretical Kvs value (see type overview) and the below-mentioned formula. The calculated value is dependent on the required maximum flow V'max. Higher differential pressures are compensated for automatically by the valve.

Formula

$$\Delta p_{min} = 100 \times \left(\frac{V'_{max}}{K_{vs}\ theor.} \right)^2$$

Δp_{min}: kPa
V'_{max}: m³/h
K_{vs} theor.: m³/h

Example (DN 25 with the desired maximum flow rate = 50% V'nom)

EP025R2+KBAC
K_{vs} theor. = 8.8 m³/h
V'_{nom} = 58.3 l/min
50% x 58.3 l/min = 29.2 l/min = 1.75 m³/h

$$\Delta p_{min} = 100 \times \left(\frac{V'_{max}}{K_{vs}\ theor.} \right)^2 = 100 \times \left(\frac{1.75\ m^3/h}{8.8\ m^3/h} \right)^2 = 4\ kPa$$

Behaviour in case of sensor failure

In case of a flow sensor error, the EPIV will switch from flow control to position control.

Once the error disappears, the EPIV will switch back to the normal control setting.

Service

Wireless connection

Belimo devices marked with the NFC logo can be operated with Belimo Assistant 2.

Requirement:

- NFC- or Bluetooth-capable smartphone
- Belimo Assistant 2 (Google Play and Apple App Store)

Align NFC-capable smartphone on the device so that both NFC antennas are superposed.

Connect Bluetooth-enabled smartphone via the Bluetooth-to-NFC converter ZIP-BT-NFC to the device. Technical data and operating instructions are shown in the ZIP-BT-NFC data sheet.

Readable values: volumetric flow, accumulated flow, fluid temperature, glycol content in %, alarm/error messages

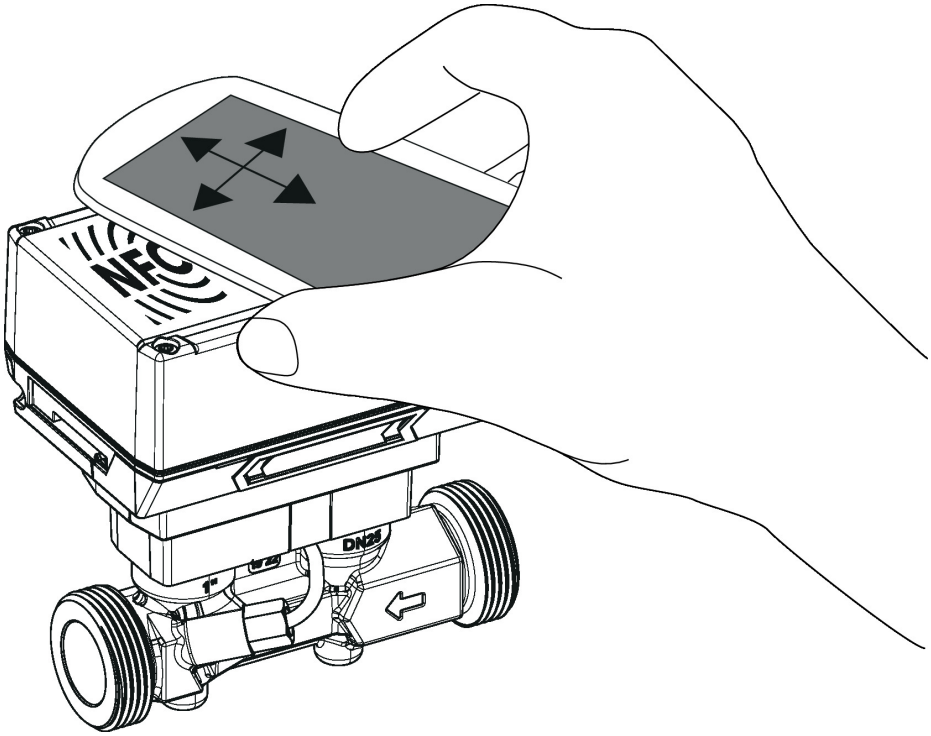

Dimensions

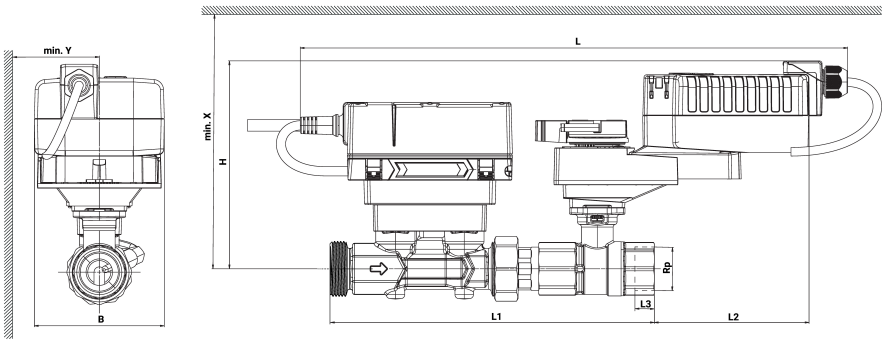

Type	DN	Rp [“]	G [“]	L [mm]	L1 [mm]	L2 [mm]	L3 [mm]	B [mm]	H [mm]	X [mm]	Y [mm]	kg
EP015R2+KBAC	15	1/2	3/4	428	195	128	13	90	156	226	80	2.6
EP020R2+KBAC	20	3/4	1	440	230	123	14	90	158	228	80	2.9
EP025R2+KBAC	25	1	1 1/4	447	246	117	16	90	158	228	80	3.2
EP032R2+KBAC	32	1 1/4	1 1/2	459	267	110	19	90	162	232	80	3.9
EP040R2+KBAC	40	1 1/2	2	465	281	106	19	90	162	232	80	4.3
EP050R2+KBAC	50	2	2 1/2	473	294	100	22	90	168	238	80	5.7

Further documentation

- Tool connections
- BACnet Interface description
- Modbus Interface description
- Overview MP Cooperation Partners
- MP Glossary
- Introduction to MP-Bus Technology
- General notes for project planning
- Installation instructions for actuators and/or ball valves
- Quick Guide – Belimo Assistant 2