Rotary actuator with fail-safe for ball valves

- Torque motor 10 Nm
- Nominal voltage AC 24...240 V / DC 24...125 V
- Control Open/close
- Deenergised open (NO)

Picture may differ from product

## Technical data

| | | |
|---|---|---|
| **Electrical data** | Nominal voltage | AC 24...240 V / DC 24...125 V |
| | Nominal voltage frequency | 50/60 Hz |
| | Nominal voltage range | AC 19.2...264 V / DC 21.6...137.5 V |
| | Power consumption in operation | 6 W |
| | Power consumption in rest position | 2.5 W |
| | Power consumption for wire sizing | 9.5 VA |
| | Connection supply / control | Cable 1 m, 2x 0.75 $mm^2$ |
| | Parallel operation | Yes (note the performance data) |
| **Functional data** | Torque motor | 10 Nm |
| | Torque fail-safe | 10 Nm |
| | Direction of motion fail-safe | Deenergised NO, valve open (A – AB = 100%) |
| | Direction of motion note | for valves with L-bore (A – AB = 0%) |
| | Manual override | by means of hand crank and locking switch |
| | Running time motor | 75 s / 90° |
| | Running time fail-safe | <20 s @ -20...50°C, <60 s @ -30°C |
| | Sound power level, motor | 45 dB(A) |
| | Position indication | Mechanical |
| | Service life | Min. 60'000 fail-safe positions |
| **Safety data** | Protection class IEC/EN | II, reinforced insulation |
| | Protection class UL | II, reinforced insulation |
| | Degree of protection IEC/EN | IP54 |
| | Degree of protection NEMA/UL | NEMA 2 |
| | Housing | UL Enclosure Type 2 |
| | EMC | CE according to 2014/30/EU |
| | Low voltage directive | CE according to 2014/35/EU |
| | Certification IEC/EN | IEC/EN 60730-1 and IEC/EN 60730-2-14 |
| | UL Approval | cULus according to UL60730-1A, UL60730-2-14 and CAN/CSA E60730-1<br>The UL marking on the actuator depends on the production site, the device is UL-compliant in any case |
| | Type of action | Type 1.AA |
| | Rated impulse voltage supply / control | 4 kV |
| | Pollution degree | 3 |
| | Ambient humidity | Max. 95% RH, non-condensing |

## Technical data

| | | |
|---|---|---|
| **Safety data** | Ambient temperature | -30...50°C [-22...122°F] |
| | Storage temperature | -40...80°C [-40...176°F] |
| | Servicing | maintenance-free |
| **Weight** | Weight | 2.0 kg |

## Safety notes

- This device has been designed for use in stationary heating, ventilation and air-conditioning systems and must not be used outside the specified field of application, especially in aircraft or in any other airborne means of transport.
- Outdoor application: only possible in case that no (sea) water, snow, ice, insolation or aggressive gases interfere directly with the device and that it is ensured that the ambient conditions remain within the thresholds according to the data sheet at any time.
- Caution: Mains voltage!
- Only authorised specialists may carry out installation. All applicable legal or institutional installation regulations must be complied with during installation.
- The device may only be opened at the manufacturer's site. It does not contain any parts that can be replaced or repaired by the user.
- Cables must not be removed from the device.
- The device contains electrical and electronic components and must not be disposed of as household refuse. All locally valid regulations and requirements must be observed.

## Product features

**Operating mode**

The actuator is equipped with a universal power supply module that can utilise supply voltages of AC 24...240 V and DC 24...125V.

The actuator moves the valve to the operating position at the same time as tensioning the return spring. The valve is turned back to the fail-safe position by spring force when the supply voltage is interrupted.

**Simple direct mounting**

Simple direct mounting on the ball valve with only one screw. The mounting orientation in relation to the ball valve can be selected in 90° steps.

**Manual override**

By using the hand crank the valve can be operated manually and engaged with the locking switch at any position. Unlocking is carried out manually or automatically by applying the operating voltage.

**Adjustable angle of rotation**

Adjustable angle of rotation with mechanical end stops.

**High functional reliability**

The actuator is overload protected, requires no limit switches and automatically stops when the end stop is reached.

## Electrical installation

**Caution: Mains voltage!**

**Parallel connection of other actuators possible. Observe the performance data.**

**Wire colours:**
1 = blue
2 = brown

## Electrical installation

AC 24...240 V / DC 24...125 V, open/close

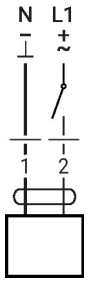


## Dimensions

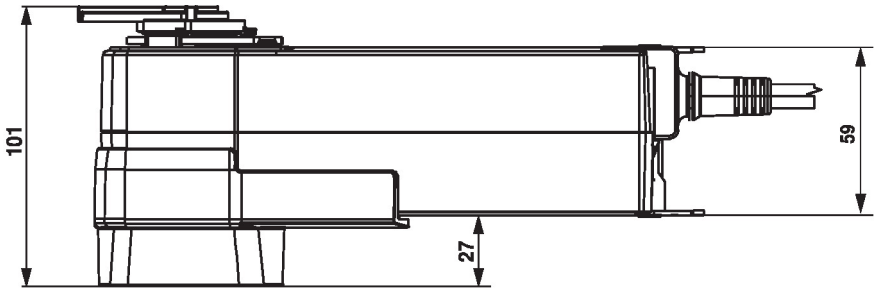


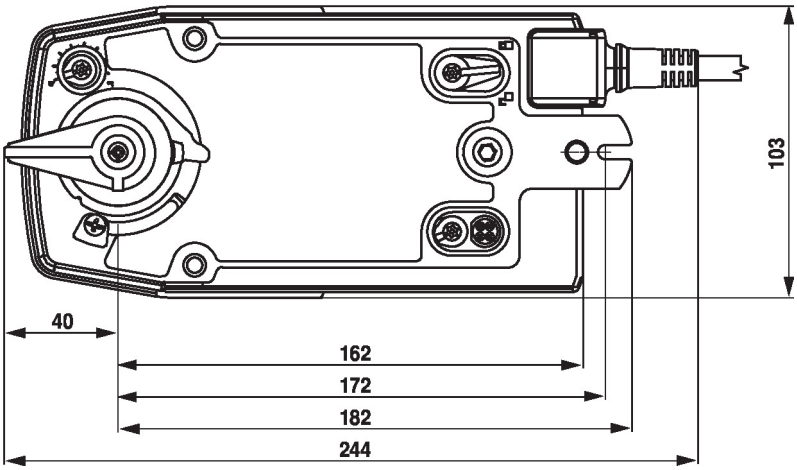


## Further documentation

- The complete product range for water applications
- Data sheets for ball valves
- Installation instructions for actuators and/or ball valves
- General notes for project planning