Outdoor sensor Temperature

With external sensor probe for measuring temperature in outdoor areas. Typical applications at cold stores, greenhouses, production plants and warehouses. IP65 / NEMA 4X rated housing.

5 YEAR WARRANTY

Type Overview

Type	Output signal passive temperature	Additional features
01UT-1A0X	Pt100	External sensor
01UT-1B0X	Pt1000	External sensor

Technical data

Electrical data	Electrical connection	Pluggable spring loaded terminal block max. 2.5 mm²
	Cable entry	Cable gland with strain relief ø6...8 mm
Functional data	Medium	Air
Measuring data	Measured values	Temperature
Specification temperature passive	Measuring range	-35...50°C [-30...120°F]
	Measuring current	Pt100: <1 mA @ 0°C [32°F] Pt1000: <0.3 mA @ 0°C [32°F]
	Accuracy temperature	Class B, ±0.3°C @ 0°C [±0.5°F @ 32° F]
	Time constant τ (63%) in the room	Typical 420 s
Safety data	Protection class IEC/EN	III, Protective Extra-Low Voltage (PELV)
	Power source UL	Class 2 Supply
	Degree of protection IEC/EN	IP65
	Degree of protection NEMA/UL	NEMA 4X
	Housing	UL Enclosure Type 4X
	EU Conformity	CE Marking
	Certification IEC/EN	IEC/EN 60730-1
	Quality Standard	ISO 9001
	Type of action	Type 1
	Rated impulse voltage supply	0.8 kV
	Pollution degree	3
	Ambient humidity	Max. 95% RH, non-condensing
	Ambient temperature	-35...50°C [-30...120°F]
	Fluid temperature	-35...50°C [-30...122°F]
	Housing surface temperature	Max. 70°C [160°F]
Materials	Housing	Cover: PC, white Bottom: PC, white Seal: NBR70, black UV resistant

Technical data

Materials

Cable gland	PA6, white
Mounting plate	PC, grey RAL 7001

Safety notes

This device has been designed for use in stationary heating, ventilation and air-conditioning systems and must not be used outside the specified field of application. Unauthorised modifications are prohibited. The product must not be used in relation with any equipment that in case of a failure may threaten humans, animals or assets.

Ensure all power is disconnected before installing. Do not connect to live/operating equipment.

Only authorised specialists may carry out installation. All applicable legal or institutional installation regulations must be complied with during installation.

The device contains electrical and electronic components and must not be disposed of as household refuse. All locally valid regulations and requirements must be observed.

Remarks

General remarks concerning sensors

Due to self-heating with 2 wire passive sensors, the supply wire current affects the measurement accuracy. So the supply current should not be higher than the measuring current values specified in this data sheet.

When using lengthy connecting cables (depending on the cross section used), the cable resistance must be taken into account. The lower the impedance of the sensor used, the greater the effect of the line resistance on the measurement, because it generates an offset.

Parts included

Description	Type
Mounting plate S housing	A-22D-A09
Dowels Screws	

Accessories

Optional accessories

Description	Type
Connection adapter flex conduit, M20x1.5, for cable gland 1x 6 mm, Multipack 10 pcs.	A-22G-A01.1

Wiring diagram

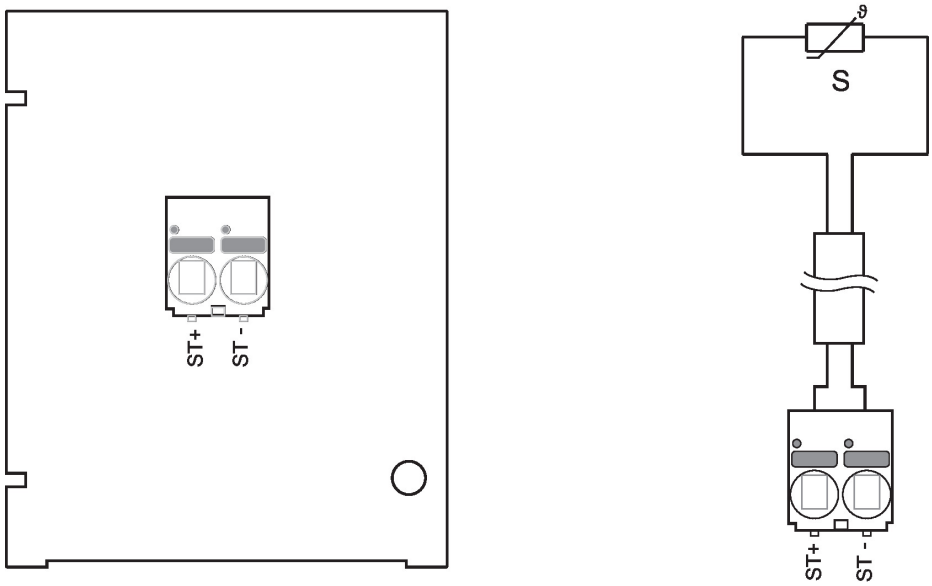

Dimensions

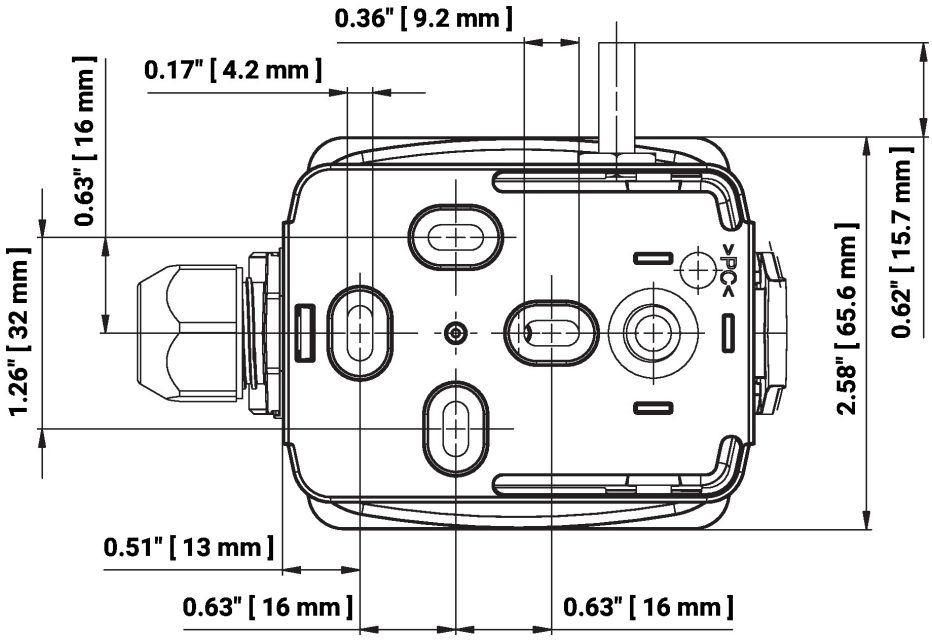

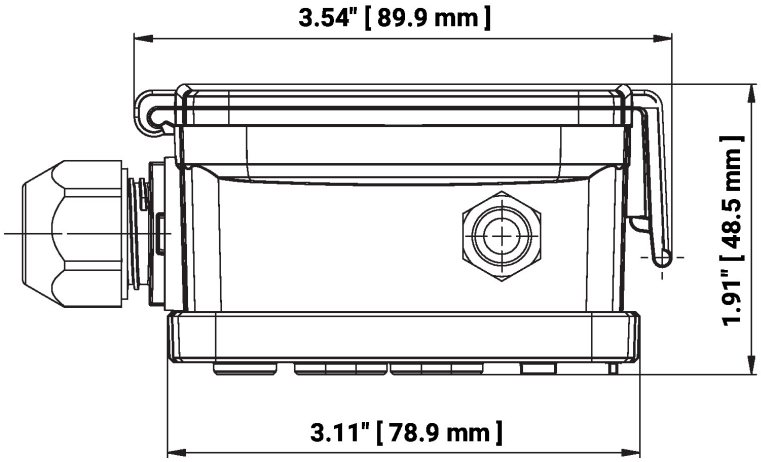

Type	Probe length	Weight
01UT-1A0X	25 mm	0.12 kg
01UT-1B0X	25 mm	0.12 kg

Further documentation

- Installation instructions
- Resistance characteristics