Duct sensor $CO_2$

Active sensor (0...10 V) for measuring $CO_2$. Dual channel $CO_2$ technology. IP65 / NEMA 4X rated housing.

5 YEAR WARRANTY

## Type Overview

| Type | Output signal active $CO_2$ |
|---|---|
| 22DC-11 | 0...5 V, 0...10 V |

## Technical data

| | | |
|---|---|---|
| **Electrical data** | Nominal voltage | AC/DC 24 V |
| | Nominal voltage range | AC 19...29 V / DC 15...35 V |
| | Power consumption AC | 4.3 VA |
| | Power consumption DC | 2.3 W |
| | Electrical connection | Pluggable spring loaded terminal block max. 2.5 $mm^2$ |
| | Cable entry | Cable gland with strain relief ø6...8 mm |
| **Functional data** | Medium | Air |
| | Voltage output | 1 x 0...5 V, 0...10 V, min. resistance 10 kΩ |
| | Output signal active note | Output 0...5/10 V with Jumper adjustable |
| **Measuring data** | Measured values | $CO_2$ |
| **Specification $CO_2$** | Sensing element technology | Non-dispersive infrared (NDIR) dual channel |
| | Measuring range | 0...2000 ppm |
| | Accuracy | ±(50 ppm + 3% of measured value) |
| | Long term stability | ±50 ppm p.a. |
| | Time constant τ (63%) in the air duct | Typical 33 s @ 1 m/s |
| **Safety data** | Protection class IEC/EN | III, Safety Extra-Low Voltage (SELV) |
| | Power source UL | Class 2 Supply |
| | Degree of protection IEC/EN | IP65 |
| | Degree of protection NEMA/UL | NEMA 4X |
| | Housing | UL Enclosure Type 4X |
| | EU Conformity | CE Marking |
| | Certification IEC/EN | IEC/EN 60730-1 |
| | Quality Standard | ISO 9001 |
| | UL Approval | cULus acc. to UL60730-1A/-2-9, CAN/CSA E60730-1/-2-9 |
| | Type of action | Type 1 |
| | Rated impulse voltage supply | 0.8 kV |
| | Pollution degree | 3 |
| | Ambient humidity | Max. 95% RH, non-condensing |

## Technical data

| | | |
|---|---|---|
| **Safety data** | Ambient temperature | 0...50°C [32...122°F] |
| | Fluid humidity | Max. 95% RH, non-condensing |
| | Fluid temperature | 0...50°C [32...122°F] |
| | Operating condition airflow | min. 0.3 m/s<br>max. 12 m/s |
| **Materials** | Housing | Cover: PC, orange<br>Bottom: PC, orange<br>Seal: NBR70, black<br>UV resistant |
| | Cable gland | PA6, black |
| | Probe material | PA6, black |

## Safety notes

This device has been designed for use in stationary heating, ventilation and air-conditioning systems and must not be used outside the specified field of application. Unauthorised modifications are prohibited. The product must not be used in relation with any equipment that in case of a failure may threaten humans, animals or assets.

Ensure all power is disconnected before installing. Do not connect to live/operating equipment.

Only authorised specialists may carry out installation. All applicable legal or institutional installation regulations must be complied with during installation.

The device contains electrical and electronic components and must not be disposed of as household refuse. All locally valid regulations and requirements must be observed.

## Product Features

**$CO_2$ dual channel technology**

All $CO_2$ sensors are subject to drift, which is caused by the ageing process of the components and requires regular calibration and adjustment or replacement of the sensors. The dual-channel technology minimises this drift by compensating for the majority of the ageing effects of the measuring channel through adjustment with a reference channel.

This makes it possible to use dual-channel sensors in applications with 24/7 occupancy. Regular calibration with fresh outdoor air, as is the case with sensors with ABC logic, is not necessary with dual-channel sensors. It is recommended to recalibrate the sensor after 5 years of operation.

## Remarks

**General remarks concerning sensors**

Sensing devices with a transducer should always be operated in the middle of the measuring range to avoid deviations at the measuring end points. The ambient temperature of transducer electronics should be kept constant. The transducers must be operated at a constant supply voltage (±0.2 V). When switching the supply voltage on/off, onsite power surges must be avoided.

**Remark: Occurring draft leads to a better carrying-off of dissipative power at the sensor. Thus temporally limited fluctuations might occur upon temperature measurement.**

**Requirements to be met by the medium**

To ensure the ongoing and optimal functioning of the sensor, it is imperative that the air being measured is free of dust or other contaminants that could accumulate on the sensor element.

## Parts included

| Description | Type |
|---|---|
| Mounting flange for duct sensor 19.5 mm, up to max. 120°C [248°F], Plastic | A-22D-A35 |

## Accessories

| Optional accessories | Description | Type |
|---|---|---|
| | Replacement filter sensor probe tip, wire mesh, Stainless steel | A-22D-A06 |
| | Connection adapter flex conduit, M20x1.5, for cable gland 1x 6 mm, Multipack 10 pcs. | A-22G-A01.1 |
| | Mounting plate L housing | A-22D-A10 |

## Wiring diagram

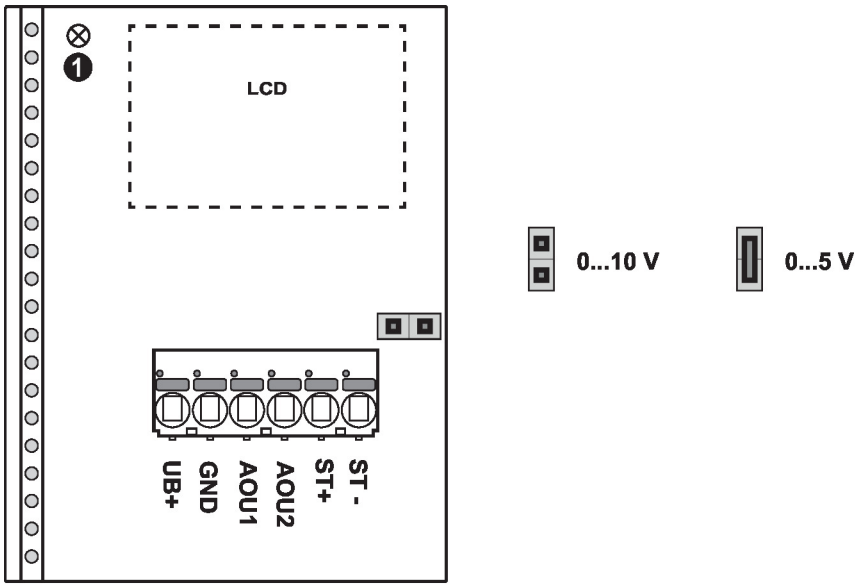


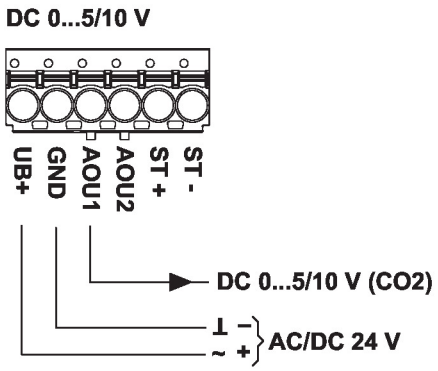


① Status LED

## Dimensions

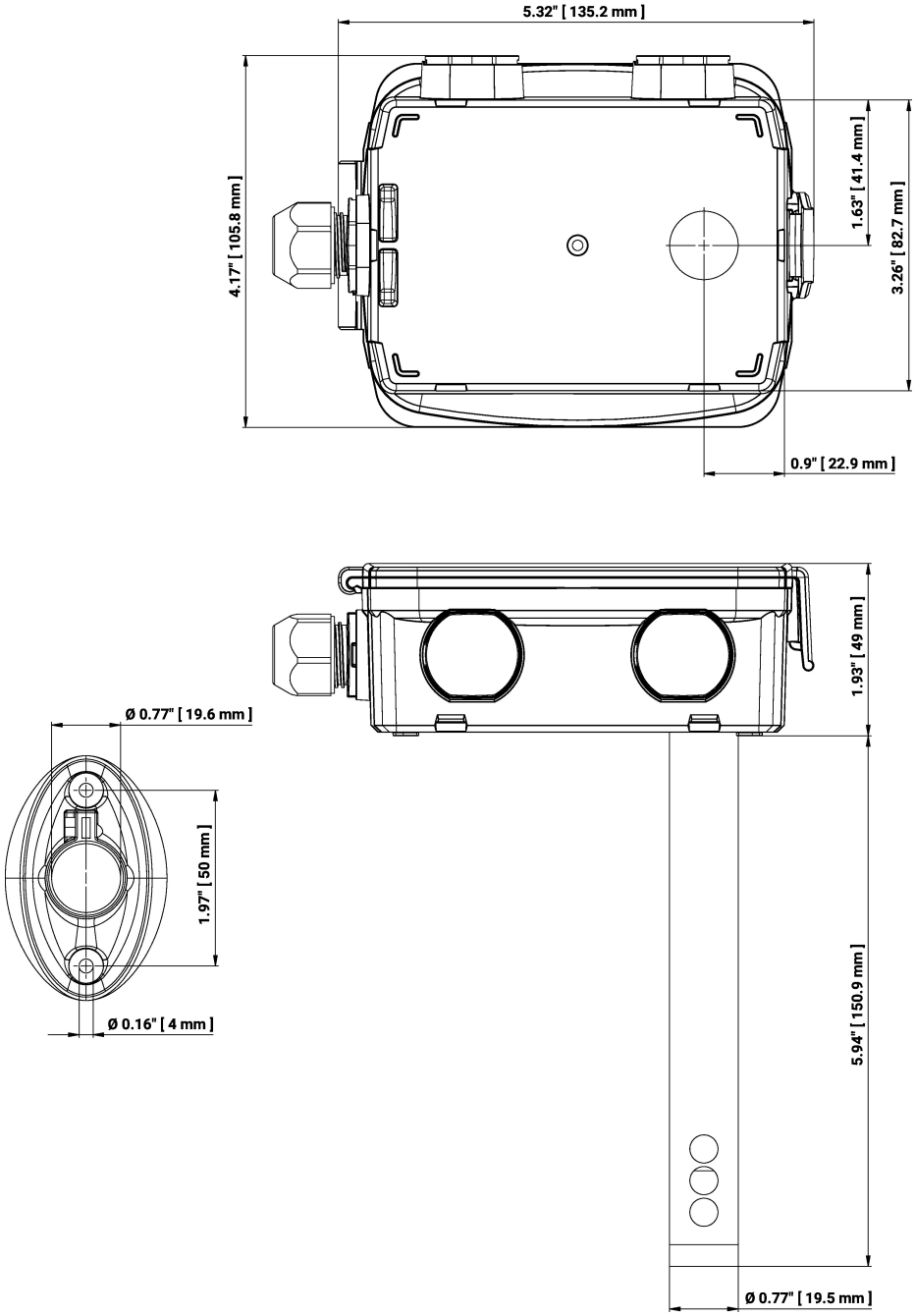


| Type | Probe length | Weight |
|---|---|---|
| 22DC-11 | 150 mm | 0.26 kg |

## Further documentation

- Installation instructions