Condensation switch

For detection of condensation on chilled surfaces (e.g. chilled beams). With relay contact for connection to controller and display systems or for series connection with the cooling valve to interrupt the cold water flow directly when condensation begins. IP65 / NEMA 4X rated housing.

## Type Overview

| Type | Output signal condensation detector relay | Additional features | Cable length |
|---|---|---|---|
| 22HH-100X | Changeover | External sensor | 2 m |

## Technical data

| | | |
|---|---|---|
| **Electrical data** | Nominal voltage | AC/DC 24 V |
| | Nominal voltage range | AC 21.6...26.4 V / DC 13.5...26.4 V |
| | Power consumption AC | 1.6 VA |
| | Power consumption DC | 0.8 W |
| | Electrical connection | Pluggable spring loaded terminal block max. 2.5 mm² |
| | Cable entry | Cable gland with strain relief ø6...8 mm |
| **Functional data** | Medium | Water |
| | Switching contact | SPDT, potential-free<br>Max. AC/DC 24 V / 1 A |
| | Display | LED, Green - power supply OK<br>Red - condensation |
| | Display type | LED |
| **Measuring data** | Measured values | Condensation |
| **Safety data** | Protection class IEC/EN | III, Safety Extra-Low Voltage (SELV) |
| | Power source UL | Class 2 Supply |
| | Degree of protection IEC/EN | IP65 |
| | Degree of protection NEMA/UL | NEMA 4X |
| | Housing | UL Enclosure Type 4X |
| | EU Conformity | CE Marking |
| | Certification IEC/EN | IEC/EN 60730-1 |
| | Quality Standard | ISO 9001 |
| | UL Approval | cULus acc. to UL60730-1A/-2-9/-2-13, CAN/CSA E60730-1/-2-9 |
| | Type of action | Type 1.B |
| | Rated impulse voltage supply | 0.8 kV |
| | Pollution degree | 3 |
| | Ambient humidity | Max. 95% RH, non-condensing |
| | Ambient temperature | -20...50°C [-4...122°F] |
| | Fluid temperature | -20...60°C [-4...140°F] |
| **Materials** | Housing | Cover: PC, transparent<br>Bottom: PC, orange<br>Seal: NBR70, black<br>UV resistant |

## Technical data

| | | |
|---|---|---|
| **Materials** | Cable gland | PA6, black |

## Safety notes

This device has been designed for use in stationary heating, ventilation and air-conditioning systems and must not be used outside the specified field of application. Unauthorised modifications are prohibited. The product must not be used in relation with any equipment that in case of a failure may threaten humans, animals or assets.

Ensure all power is disconnected before installing. Do not connect to live/operating equipment.

Only authorised specialists may carry out installation. All applicable legal or institutional installation regulations must be complied with during installation.

The device contains electrical and electronic components and must not be disposed of as household refuse. All locally valid regulations and requirements must be observed.

## Remarks

**General remarks concerning sensors**

Sensing devices with a transducer should always be operated in the middle of the measuring range to avoid deviations at the measuring end points. The ambient temperature of transducer electronics should be kept constant. The transducers must be operated at a constant supply voltage (±0.2 V). When switching the supply voltage on/off, onsite power surges must be avoided.

**Remark surface measurements**

When measuring temperature, humidity or condensation on a surface, both the temperature of the surface and that of the ambient air influence the measurement result. When measuring on a pipe surface, the influence of the ambient air can be minimised by using thermal contact fluid.

## Parts included

| Description | Type |
|---|---|
| Mounting plate S housing | A-22D-A09 |
| Thermal contact fluid | A-22P-A44 |
| Screws | |
| Dowels | |
| Cable tie | |

## Accessories

**Optional accessories**

| Description | Type |
|---|---|
| Connection adapter flex conduit, M20x1.5, for cable gland 1x 6 mm, Multipack 10 pcs. | A-22G-A01.1 |

## Wiring diagram

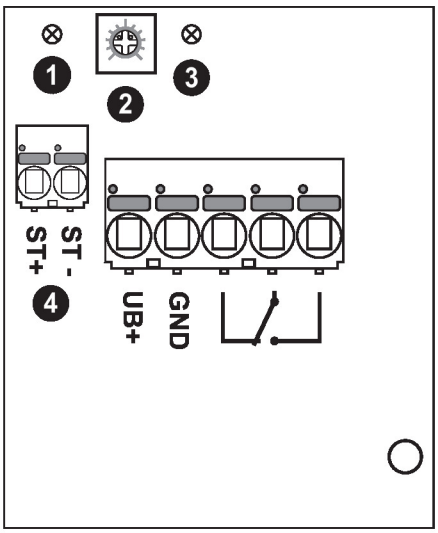


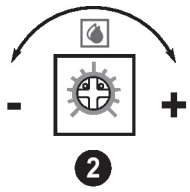


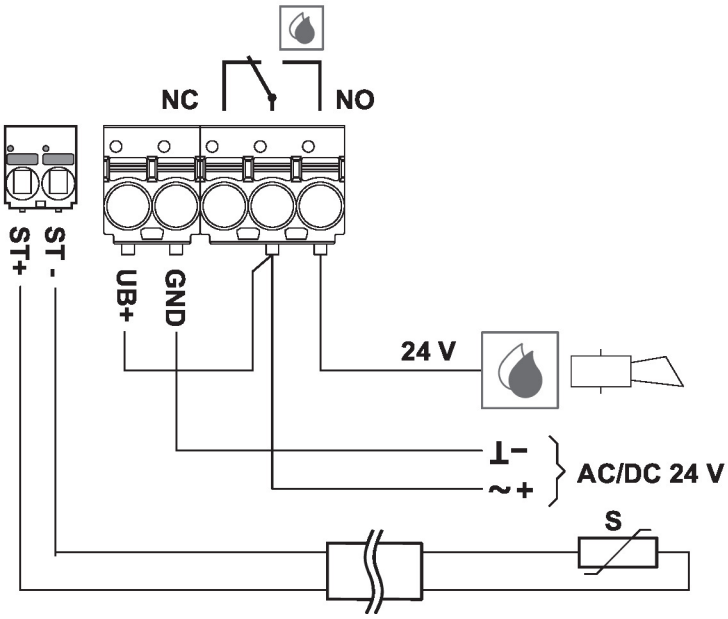


① LED red: condensation
② Sensitivity adjustment
+ less sensitive
- more sensitive
③ LED green: power supply OK
④ For external condensation sensor

## Dimensions

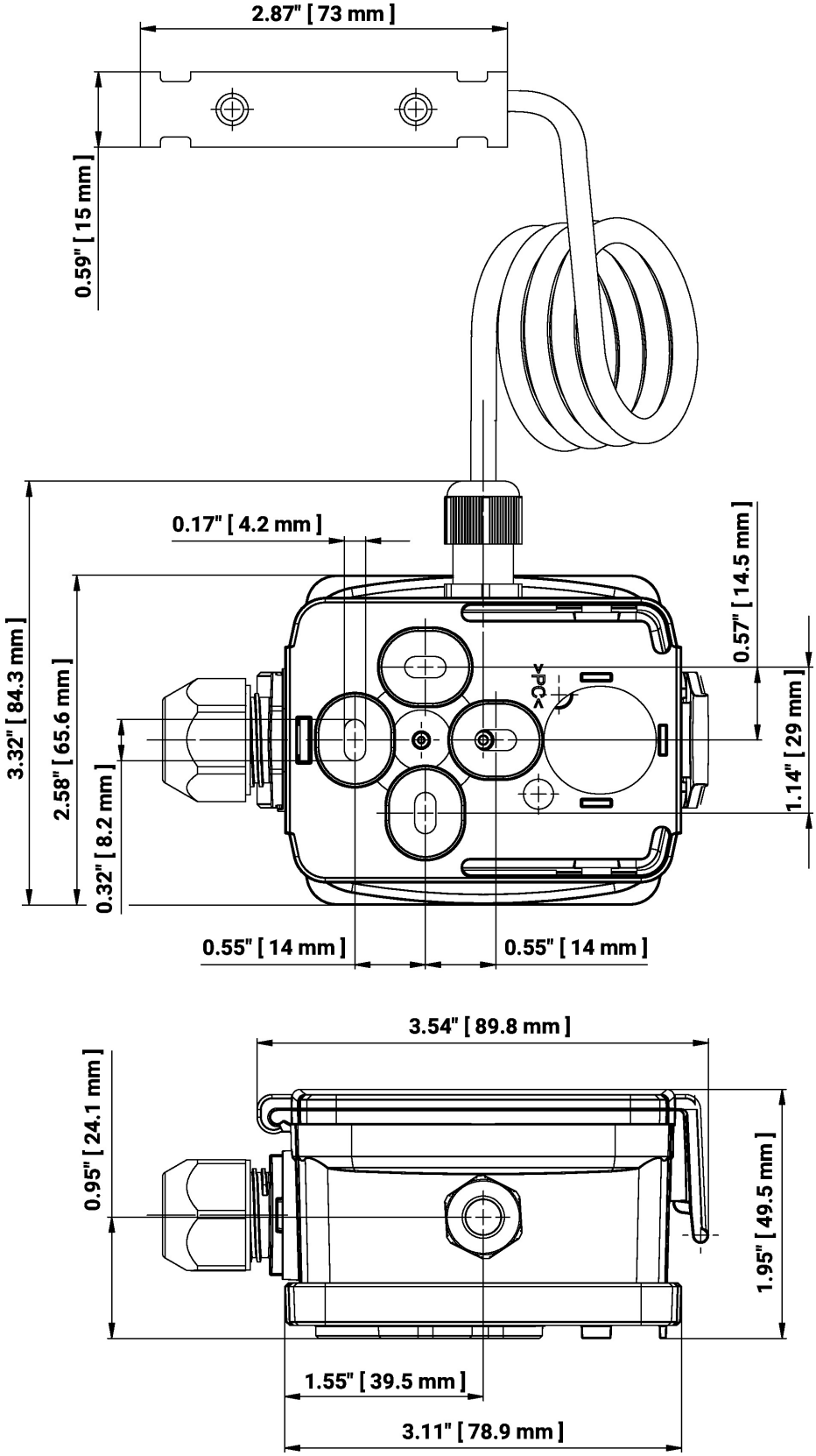


| Type | Weight |
|---|---|
| 22HH-100X | 0.20 kg |

## Further documentation

- Installation instructions