Thermal energy meter

Thermal energy meter for measuring energy in a heating or cooling circuit. The device is certified for heating applications according to MID and fulfills the requirements of EN1434. If required, the power supply can be provided via PoE (Power over Ethernet). Communication is provided via BACnet, Modbus or MP-Bus. Configuration is done with Belimo Assistant 2 via NFC technology or via web server. The commissioning report can be generated automatically. Connection to the Belimo Cloud is possible.

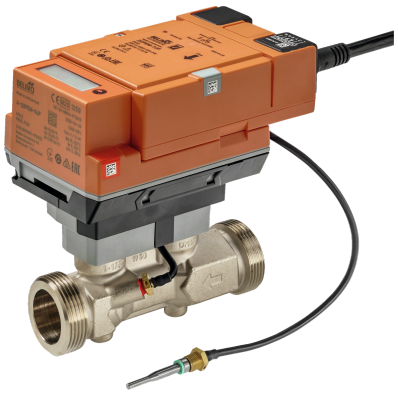

MID 2014/32/EU
EN 1434

Type Overview

Type	DN	G ["]	qp [m³/h]	qs [m³/h]	qi [m³/h]	Kvs theor. [m³/h]	Δp [kPa]	Q'max [kW]	PN
22PEM-1UC	15	3/4	1.5	3	0.015	3.9	15	350	25
22PEM-1UD	20	1	2.5	5	0.025	7.2	12	585	25
22PEM-1UE	25	1 1/4	3.5	7	0.035	13.2	7	815	25
22PEM-1UF	32	1 1/2	6	12	0.06	16.0	14	1400	25
22PEM-1UG	40	2	10	20	0.1	23.6	18	2330	25
22PEM-1UH	50	2 1/2	15	30	0.15	32.0	22	3500	25

qp: Nominal flow

qs: Highest flow

qi: Lowest flow

Kvs theor.: theoretical Kvs value for pressure drop calculation

Δp: Pressure drop at nominal flow qp

Q'max: Maximum thermal output (q = qs, ΔΘ = 100 K)

Dimensioning is done according to EN 1434-1, see also datasheet section "Dimensioning"

Structure

Components

The thermal energy meter 22PEM-1U... consists of a logic and a sensor module.

The logic module provides the power supply, the communication interface and the NFC connection of the energy meter. All MID-relevant data are measured and recorded in the sensor module. The display is also located in the sensor module.

This modular design of the energy meter means that the logic module can remain in the system if the sensor module is replaced.

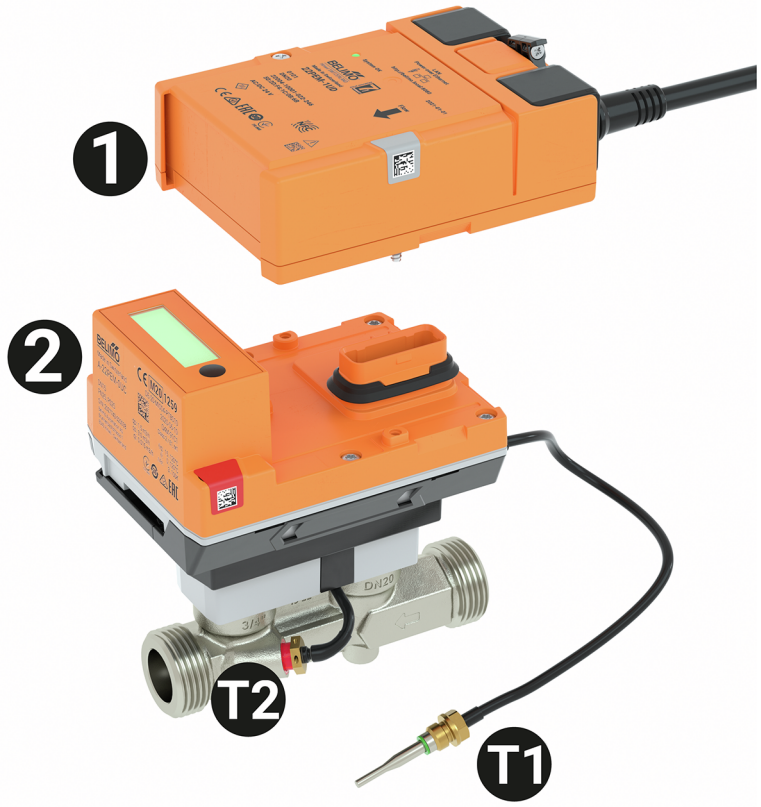

External temperature sensor T1
Integrated temperature sensor T2
Logic module 1
Sensor module 2

Technical data

Electrical data

Nominal voltage	AC/DC 24 V
Nominal voltage frequency	50/60 Hz
Nominal voltage range	AC 19.2...28.8 V / DC 21.6...28.8 V
Power consumption AC	3 VA
Power consumption DC	1.5 W
Power consumption PoE	2.2 W
Connection supply	Cable 1 m, 6x 0.75 mm²
Connection Ethernet	RJ45 socket
Power over Ethernet PoE	DC 37...57 V IEEE 802.3af/at, Type 1, Class 3 11 W (PD13W)
Conductors, cables	Power supply AC/DC 24 V: cable length <100 m, no shielding or twisting required Power supply PoE: shielded cables recommended
Battery operation	Battery buffering for 14 months in battery operation only For battery operation - Continuity of energy metering - Storage of the cumulated meter readings - no communication (except NFC) - Display function

Technical data

Electrical data	Switching to battery operation	When the supply voltage of AC/DC 24 V or PoE is interrupted
	Annual energy consumption	With external energy supply 13.2 kWh
Data bus communication	Communication	BACnet/IP BACnet MS/TP Modbus TCP Modbus RTU MP-Bus
	Communication note	M-Bus via Converter G-22PEM-A01
	Number of nodes	BACnet / Modbus see interface description MP-Bus max. 8 (16)
Functional data	Medium	Water
	Configuration	via NFC, Belimo Assistant 2 via integrated web server
	Voltage output	1 x 0...10 V, 0.5...10 V, 2...10 V
	PN	25
	Display	LCD, 14x44 mm Energy meter - DN 15...25: one decimal character kWh - DN 32...50: two decimal characters MWh Volumetric meter - DN 15...25: two decimal characters m^3 - DN 32...50: one decimal character m^3 Display format - Actual flow m^3/h: three decimal characters - Temperature °C: one decimal character - Differential temperature K: two decimal characters
	Pipe connection	External thread according to ISO 228-1
	Servicing	maintenance-free
Measuring data	Measured values	Flow Temperature
	Measuring principle	Ultrasonic flow measurement
Specification Flow	Behaviour at flow rate greater than qs	Limitation at 2.5 x qp
	Dynamic range qi:qp	1:100
	Measuring accuracy flow	±(2 + 0.02 qp/q)% of the measured value (q), but not more than ±5%
	Measuring accuracy flow note	@ 15...120°C Inlet section ≥0x DN (EN 1434-4:2022)
Specification temperature passive	Temperature sensor	Pt1000 - EN 60751, 2-wire technology, inseparably connected Cable length external sensor T1: 3 m
	Measuring accuracy absolute temperature	Temperature probe (probe only – individually compensated): ± (0.1 + 0.0017 |T|) °C (corresponds to Pt1000 EN60751 Class AA) Calculator + temperature probe: ± (0.15 + 0.002 |T|) °C
	Measuring accuracy differential temperature	Calculator + temperature probe: ±0.17K @ ΔT = 5K ±0.22 K @ ΔT = 10 K ±0.32 K @ ΔT = 20 K

Technical data

Heat meter	Registration	MID approval / EN 1434 DE-21-MI004-PTB010 Fluid temperature flow sensor: 15...120°C Temperature range temperature sensors: 0...120°C Difference range: 3...100 K
	Classification	Accuracy class 2 / environment class A Mechanical environment: Class M1 Electromagnetic environment: Class E1
Cooling meter	Operating range	Fluid temperature flow sensor: 5...50°C
Safety data	Protection class IEC/EN	III, Protective Extra-Low Voltage (PELV)
	Degree of protection IEC/EN	IP54 Logic module: IP54 (with grommet A-22PEM-A04) Sensor module: IP65
	EU Conformity	CE Marking
	Certification IEC/EN	IEC/EN 60730-1:11 and IEC/EN 60730-2-15:10
	Certification	MID / EN 1434
	Quality Standard	ISO 9001
	Type of action	Type 1
	Rated impulse voltage supply	0.8 kV
	Pollution degree	3
	Ambient humidity	Max. 95% RH, non-condensing
	Ambient temperature	-30...55°C [-22...131°F]
	Fluid temperature	0...120°C [32...248°F]
	Storage temperature	-40...80°C [-40...176°F]
Materials	Cable	PVC
	Fluid wetted parts	Brass nickel-plated, Brass, Stainless steel, Aramid fibre, PEEK, EPDM

Safety notes

This device has been designed for use in stationary heating, ventilation and air-conditioning systems and must not be used outside the specified field of application, especially in aircraft or in any other airborne means of transport.

Outdoor applications: Only possible where (sea) water, snow, ice, sunlight or aggressive gases cannot interfere directly with the device and it can be guaranteed that the ambient conditions remain at all times within the thresholds according to the data sheet.

Only authorised specialists may carry out installation. All applicable legal or institutional installation regulations must be complied with during installation.

The device contains electrical and electronic components and must not be disposed of as household refuse. All locally valid regulations and requirements must be observed.

The device contains a non-replaceable lithium metal battery with 0.65 g lithium. The transport regulations for lithium batteries in devices must be observed.

Product Features

Registration

The thermal energy meter meets the requirements of EN 1434 and has type approval as a heat meter according to the European Measuring Instruments Directive MID 2014/32/EU (MI-004).

When using the device as a cooling meter, the local regulations and laws must be observed.

Product Features

Data protection

Please consider the principles of data security and data privacy when using the device. This applies in particular if the device is used in residential buildings. For this purpose, the initial password for remote access (webserver) needs to be changed when configuring the device. Moreover, physical access to the device should be restricted so that only authorized persons may access the device. Alternatively, the device offers the option to permanently disable access through the NFC interface.

Operating mode

The thermal energy meter consists of a volume measuring part, evaluation electronics and two temperature sensors. One temperature sensor is integrated in flow sensor, the other temperature sensor is installed as an external sensor. The device determines the thermal energy supplied to consumers via a heating circuit or extracted from a heat exchanger via a cooling circuit from the volumetric flow and the temperature difference between supply and return flow.

The thermal energy meter can be operated as a heat meter, cooling meter or heat/cooling meter. In addition, it can be installed either in the return or in the supply of the system. The corresponding application must be set via NFC when activated with Belimo Assistant 2.

Calibration certificate

A calibration certificate is available in the Belimo Cloud for each thermal energy meter. If required, this can be downloaded as a PDF with Belimo Assistant 2 or via the Belimo Cloud frontend.

Energy metering

The thermal energy meter has a LCD display with 8 digits and special characters. The values that can be displayed are summarised in 3 display loops. The values can be displayed on the LCD display by pressing the button.

The energy meter can be configured as a combined heat/cooling meter via NFC and Belimo Assistant 2.

Flow measurement

The thermal energy meter measures the current flow rate every 0.1 s in mains operation and every 2 s in battery operation.

Power calculation

The thermal energy meter calculates the current thermal power based on the current flow rate and the measured temperature difference.

Invoicing energy consumption

The energy consumption can be read on the display for billing. In addition, the energy consumption data can be read out as follows:

- Bus
- Cloud API
- Belimo Cloud Account of the device owner
- Belimo Assistant 2
- Integrated web server

Note: Country-specific regulations must be observed when reading.

Belimo cloud

The "Terms of Use for Belimo Cloud Services" in their currently valid version apply to the use of cloud services.

Note: The connection to the Belimo Cloud is permanently available. Activation takes place via web server or Belimo Assistant 2.

Backup battery

The thermal energy meter is equipped with a non-rechargeable battery to bridge possible power failures for a maximum of 14 months in total. This applies for an operating temperature T'BAT of 25°C.

The battery ensures that the thermal energy continues to be reliably recorded in the event of temporary power failures. While the thermal energy meter is running on the battery, the values can only be read out via the display. The thermal energy meter must not be installed in such a way that intentional voltage interruptions are possible.

PoE (Power over Ethernet)

If necessary, the thermal energy meter can be supplied with power via the Ethernet cable. The PoE-powered thermal energy meter can supply power to an external device (e. g. actuator or active sensor). This function can be activated via Belimo Assistant 2. DC 24 V (max. 8 W) is then available on wires 1 and 2.

Caution: PoE may only be enabled if an external device is connected to wires 1 and 2 or wires 1 and 2 are insulated!

Product Features

Commissioning report

To avoid installation errors, it is recommended to have an installation and commissioning protocol issued when the thermal energy meter is newly installed or replaced. The documentation of all measuring point data, meter data, installation situation and operating conditions can be used to reliably verify the correct installation and function of the thermal energy meter. In this way, the legal certainty of subsequent service charge settlements can be additionally substantiated and tenant objections can be invalidated. The commissioning protocol of the thermal energy meter is based on the technical guideline K9 of the German Physikalisch Technische Bundesanstalt (PTB). Once the thermal energy meter has been commissioned, the commissioning protocol is saved on the Belimo cloud account of the device owner.

Spare parts

Sensor module of the thermal energy meter

MID-certified consisting of:

- 1 x sensor module including integrated temperature sensor T2 and external temperature sensor T1
- 2 x security seals consecutively numbered (unique) with attached wire
- 1 x seal

Pressure drop

The pressure drop across the thermal energy meter to achieve a desired flow q can be calculated using the theoretical Kvs value (see type overview) and the formula below.

Formula pressure drop

$$\Delta p = \left(\frac{q}{k_{vs}theor.}\right)^2 * 100\ kPa$$

Δp: kPa
q: m³/h
kvstheor.: m³/h

Example pressure drop calculation

22PEM-1UE (DN 25)

kvstheor. = 13.2 m³/h
qp = 3.5 m³/h
q = 1.7 m³/h

$$\Delta p = \left(\frac{q}{k_{vs}theor.}\right)^2 * 100\ kPa = \left(\frac{1.7\ m^3/h}{13.2\ m^3/h}\right)^2 * 100\ kPa = 1.66\ kPa$$

Pressure drop diagram

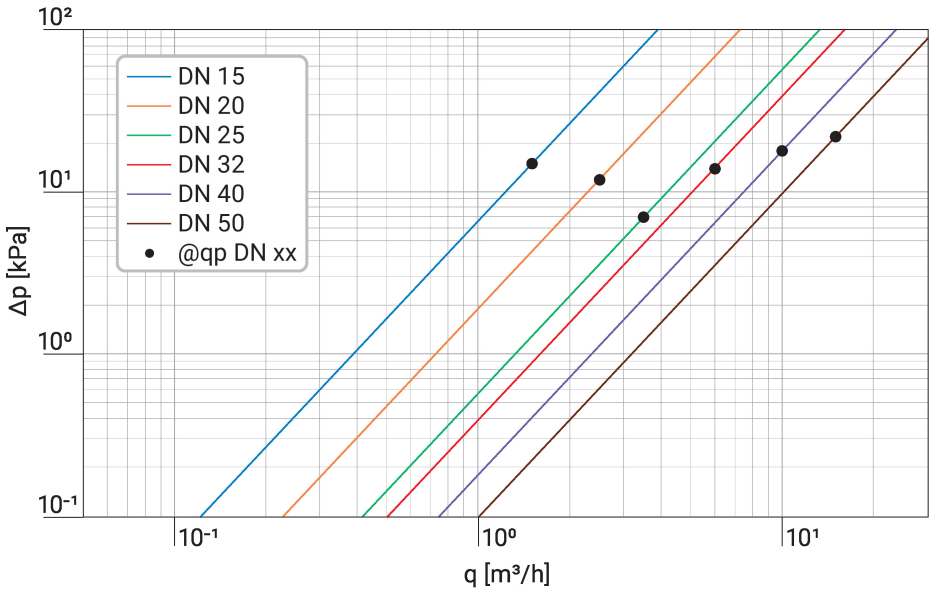

Δp = Pressure drop
q = Measured flow

Operation

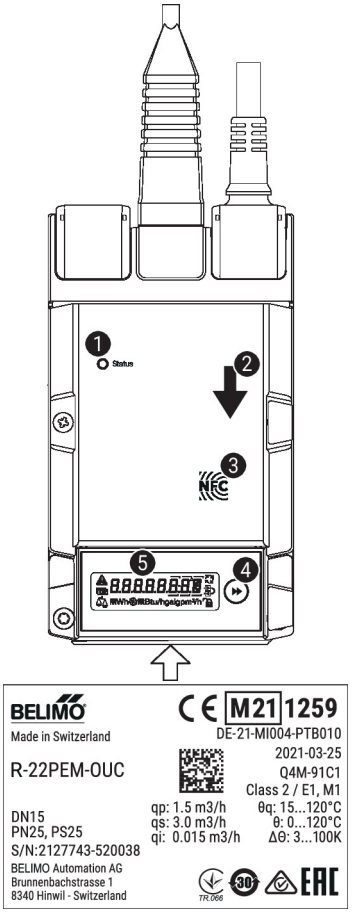

1. **LED display green**

On:	Device starting up
Flashing:	In operation (Power ok)
Off:	No power

2. **Flow direction**
3. **NFC interface**
4. **Operating button**
5. **Display**

Installation notes

In general, we recommend following the specifications of EN 1434-6.

Permissible installation orientation

The sensor can be installed upright to horizontal. The sensor may not be installed in a hanging position.

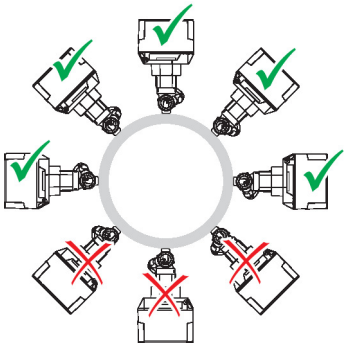

Installation in return

Installation in the return is recommended.

Dimensioning

The thermal energy meter is dimensioned to the nominal flow (qp).

The flow rate may increase to the highest flow (qs) for a short time (<1h/day).

Installation notes

Inlet section

A flow calming section or inlet section in the direction of the flow must be maintained in front of the flow sensor to achieve the specified measuring accuracy.

According to EN 1434-4:2022 (out-of-plane double 90° bends), an inlet section of 0x DN is applicable. In all other cases, EN 1434-6:2022, Annex A.4, recommends an inlet section of ≥5x DN. See also the Belimo application information on the inlet section according to EN 1434.

a) Recommended installation locations

b) Prohibited installation location due to the danger of air accumulation

c) Installation immediately after valves is prohibited. Exception: If it is a shut-off valve without constriction and it is 100% open

d) Installation on the suction side of a pump is not recommended

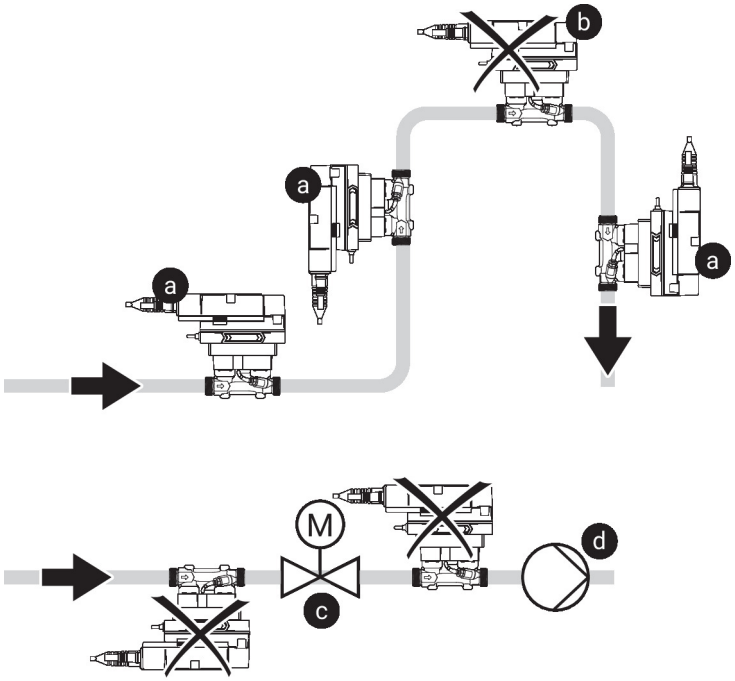

Water quality requirements

The water quality requirements specified in VDI 2035 must be adhered to.

Servicing

Thermal energy meter are maintenance-free.

Before any service work on the thermal energy meter is carried out, it is essential to isolate the thermal energy meter from the power supply (by unplugging the electrical cables if necessary). Any pumps in the part of the piping system concerned must also be switched off and the appropriate slide valves closed (allow all components to cool down first if necessary and always reduce the system pressure to ambient pressure level).

The system must not be returned to service until the thermal energy meter has been correctly reassembled in accordance with the instructions and the pipeline has been refilled by professionally trained personnel.

Flow direction

The direction of flow, specified by an arrow on the housing, is to be complied with, since otherwise the flow rate will be measured incorrectly.

Avoiding cavitation

To avoid cavitation, the system pressure at the outlet of the thermal energy meter must be a minimum of 1.0 bar at qs (highest flow) and temperatures up to 90°C.

At a temperature of 120°C the system pressure at the outlet of the thermal energy meter must be at least 2.5 bar.

Cleaning of pipes

Before installing the thermal energy meter, the circuit must be thoroughly rinsed to remove impurities.

Prevention of stresses

The thermal energy meter must not be subjected to excessive stress caused by pipes or fittings.

Parts included

Description	Type
Security seal with wire, Set of 2 pcs.	A-22PEM-A03
Grommet for RJ connection module with clamp	A-22PEM-A04
Insulation shell for thermal energy meter DN 15...25	A-22PEM-A01
Insulation shell for thermal energy meter DN 32...50	A-22PEM-A02

Insulation shell not included in Asia Pacific

Accessories

Replacement sensor modules

Description	Type
Sensor module MID thermal energy meter DN 15	R-22PEM-0UC
Sensor module MID thermal energy meter DN 20	R-22PEM-0UD
Sensor module MID thermal energy meter DN 25	R-22PEM-0UE
Sensor module MID thermal energy meter DN 32	R-22PEM-0UF
Sensor module MID thermal energy meter DN 40	R-22PEM-0UG
Sensor module MID thermal energy meter DN 50	R-22PEM-0UH

Optional accessories

Description	Type
T-piece DN 15, M10x1 for external direct immersion temperature sensor T1	A-22PEM-A06
Converter M-Bus	G-22PEM-A01
Insulation shell for thermal energy meter DN 15...25	A-22PEM-A01
MID accessory kit without fitting piece DN 15	EXT-EF-15A
MID accessory kit with fitting piece DN 15	EXT-EF-15B
Pipe connector for EPIV / Energy valve with external thread DN 15 Rp 1/2", G 3/4"	ZREV15F
MID accessory kit EV DN 15	EXT-EF-15E
T-piece DN 20, M10x1 for external direct immersion temperature sensor T1	A-22PEM-A07
MID accessory kit without fitting piece DN 20	EXT-EF-20A
MID accessory kit with fitting piece DN 20	EXT-EF-20B
Pipe connector for EPIV / Energy valve with external thread DN 20 Rp 3/4", G 1"	ZREV20F
MID accessory kit EV DN 20	EXT-EF-20E
T-piece DN 25, M10x1 for external direct immersion temperature sensor T1	A-22PEM-A08
MID accessory kit without fitting piece DN 25	EXT-EF-25A
MID accessory kit with fitting piece DN 25	EXT-EF-25B
Pipe connector for EPIV / Energy valve with external thread DN 25 Rp 1", G 1 1/4"	ZREV25F
MID accessory kit EV DN 25	EXT-EF-25E
T-piece DN 32, M10x1 for external direct immersion temperature sensor T1	A-22PEM-A09
Insulation shell for thermal energy meter DN 32...50	A-22PEM-A02
MID accessory kit without fitting piece DN 32	EXT-EF-32A
MID accessory kit with fitting piece DN 32	EXT-EF-32B
Pipe connector for EPIV / Energy valve with external thread DN 32 Rp 1 1/4", G 1 1/2"	ZREV32F
MID accessory kit EV DN 32	EXT-EF-32E
T-piece DN 40, M10x1 for external direct immersion temperature sensor T1	A-22PEM-A10
MID accessory kit without fitting piece DN 40	EXT-EF-40A
MID accessory kit with fitting piece DN 40	EXT-EF-40B
Pipe connector for EPIV / Energy valve with external thread DN 40 Rp 1 1/2", G 2"	ZREV40F
MID accessory kit EV DN 40	EXT-EF-40E
T-piece DN 50, M10x1 for external direct immersion temperature sensor T1	A-22PEM-A11
MID accessory kit without fitting piece DN 50	EXT-EF-50A
MID accessory kit with fitting piece DN 50	EXT-EF-50B

Accessories

	Description	Type
	Pipe connector for EPIV / Energy valve with external thread DN 50 Rp 2", G 2 1/2"	ZREV50F
	MID accessory kit EV DN 50	EXT-EF-50E
Tools	**Description**	**Type**
	Service tool for wired and wireless setup, on-site operation and troubleshooting.	Belimo Assistant 2
	Belimo Assistant Link Bluetooth and USB to NFC and MP-Bus converter for configurable and communicative devices	LINK.10

Service

NFC connection

Belimo devices marked with the NFC logo can be operated with Belimo Assistant 2.

Requirement:

- NFC- or Bluetooth-capable smartphone

- Belimo Assistant 2 (Google Play and Apple App Store)

Align NFC-capable smartphone on the device so that both NFC antennas are superposed.

Connect Bluetooth-enabled smartphone via the Bluetooth-to-NFC converter ZIP-BT-NFC to the device. Technical data and operating instructions are shown in the ZIP-BT-NFC data sheet.

Readable values: volumetric flow, accumulated flow, fluid temperature, glycol content in %, alarm/error messages

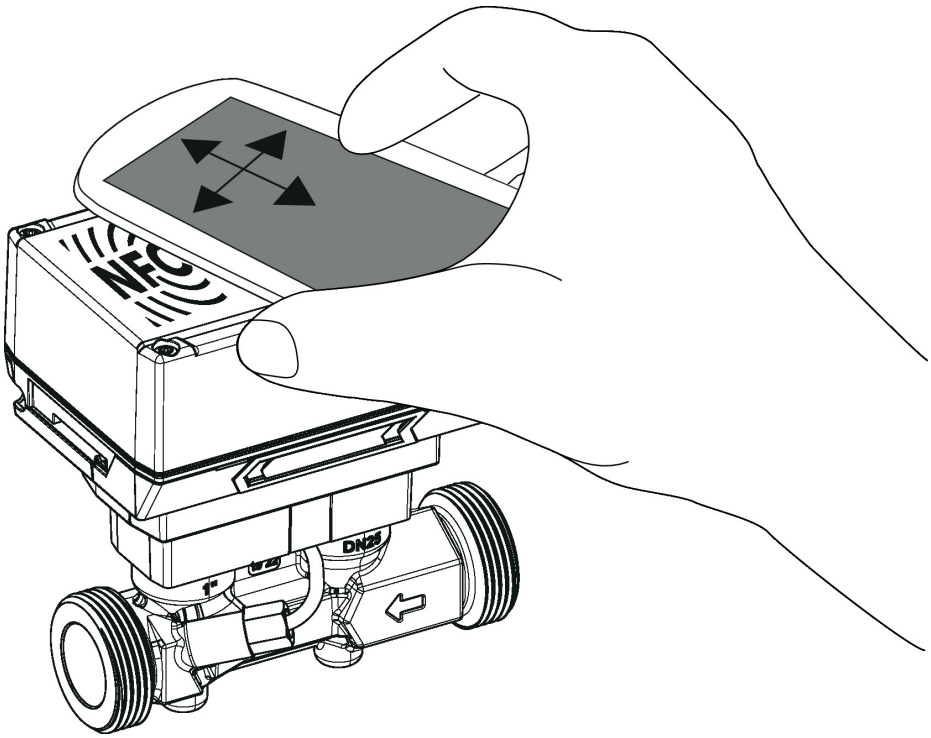

Wiring diagram

Supply from isolating transformer.

The wiring of the line for BACnet MS/TP / Modbus RTU is to be carried out in accordance with applicable RS-485 regulations.

Modbus / BACnet: Supply and communication are not galvanically isolated. Connect earth signal of the devices with one another.

Sensor connection: An additional sensor can optionally be connected to the thermal energy meter. This can be a passive resistance sensor Pt1000, Ni1000, NTC10k (10k2), an active sensor with output DC 0...10 V or a switching contact. Thus the analogue signal of the sensor can be easily digitised with the thermal energy meter and transferred to the corresponding bus system.

Analogue output: An analogue output (wire 5) is available on the thermal energy meter. It can be selected as DC 0...10 V, DC 0.5...10 V or DC 2...10 V. For example, the flow rate or the temperature of the temperature sensor T1/T2 can be output as an analogue value.

Wire colours:
1 = black
2 = red
3 = white
5 = orange
6 = pink
7 = grey

Functions:
1 = Com
2 = AC/DC 24 V
3 = Sensor (optional)
5 = 0...10 V, MP-Bus
C1 = D- (wire 6)
C2 = D+ (wire 7)

AC/DC 24 V, output signal

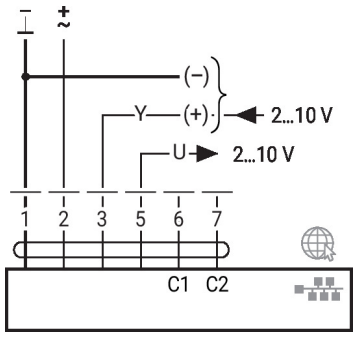

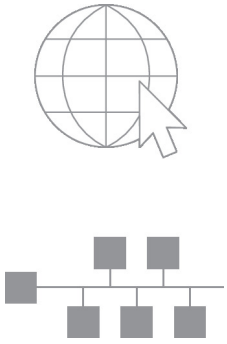

Optional connection via RJ45 (direct connection to notebook / connection via Intranet or Internet) for access to the integrated web server

BACnet MS/TP / Modbus RTU

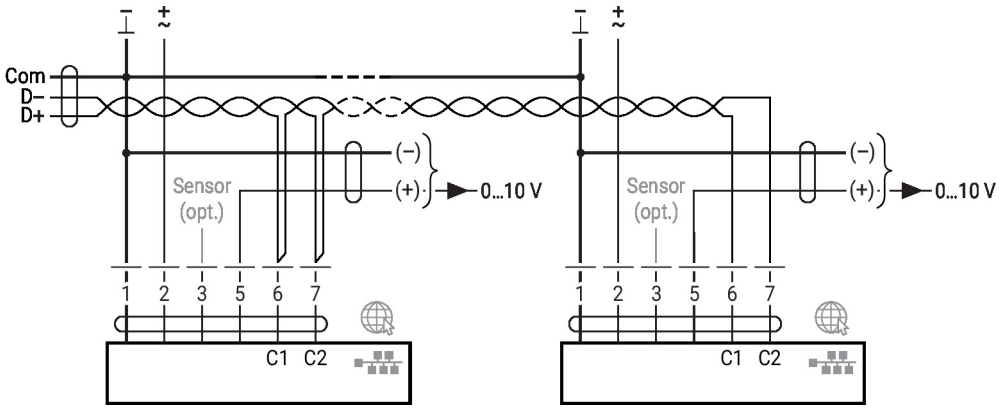

Wiring diagram

BACnet/IP / Modbus TCP

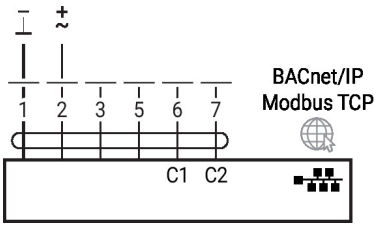

PoE with BACnet/IP / Modbus TCP

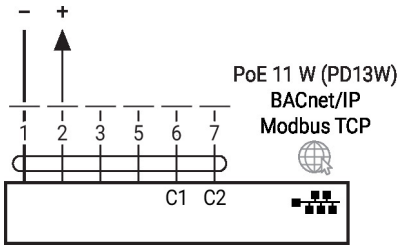

MP-Bus, supply via 3-wire connection

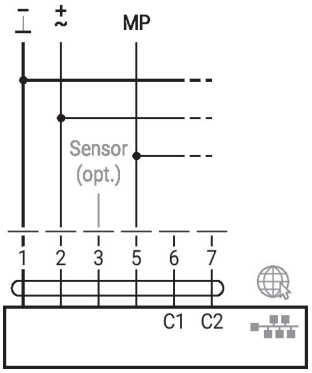

MP-Bus via 2-wire connection, local power supply

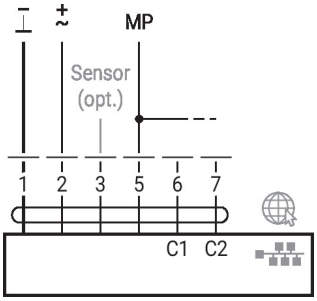

M-Bus with converter

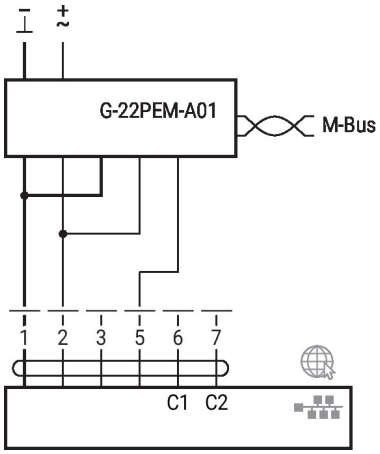

M-Bus with converter in parallel mode with BACnet/IP / Modbus TCP

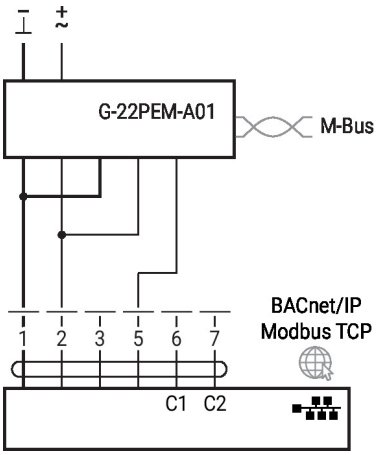

M-Bus with converter in parallel mode with PoE with BACnet/IP / Modbus TCP

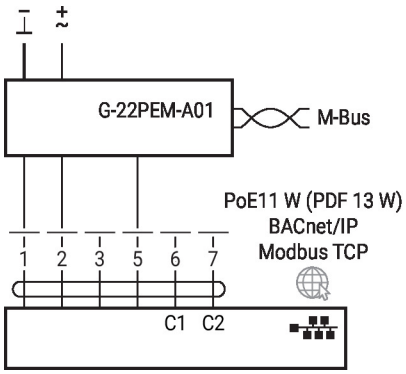

M-Bus parallel Modbus RTU or BACnet MS/TP

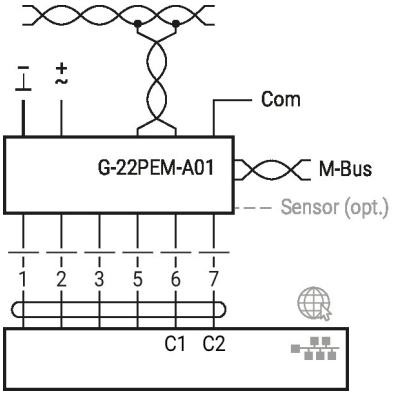

Connection with active sensor

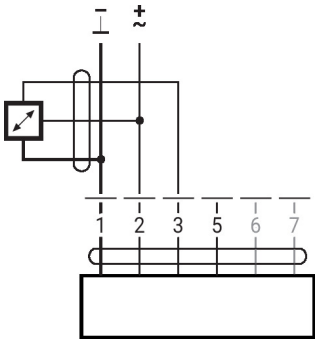

Connection with switching contact

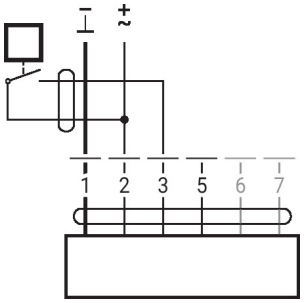

Wiring diagram

Connection with passive sensor

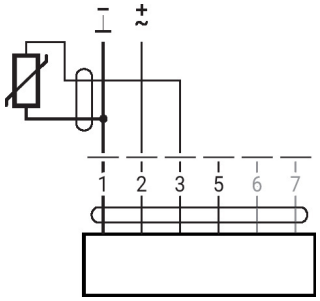

Dimensions

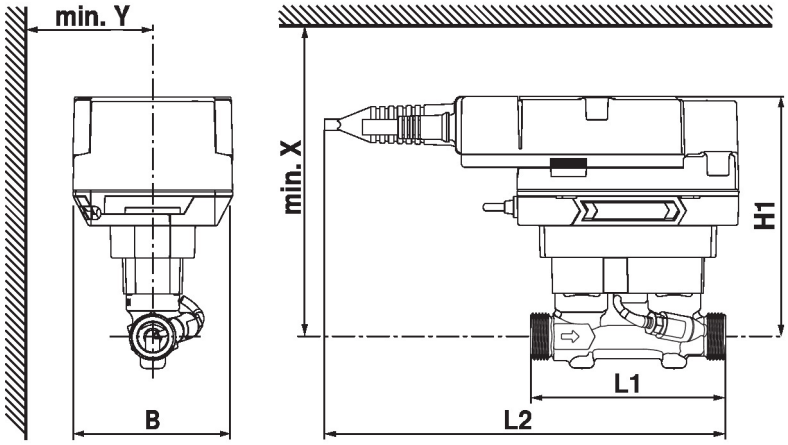

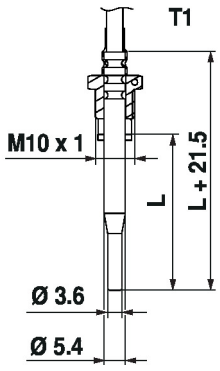

T1: Temperature sensor

Type	DN	L1 [mm]	L2 [mm]	B [mm]	H1 [mm]	L [mm]	X [mm]	Y [mm]	Weight
22PEM-1UC	15	110	230	90	136	27.5	206	85	1.4 kg
22PEM-1UD	20	130	230	90	136	27.5	206	85	1.5 kg
22PEM-1UE	25	135	230	90	140	27.5	210	85	1.6 kg
22PEM-1UF	32	140	230	90	143	38	213	85	1.8 kg
22PEM-1UG	40	145	230	90	147	38	217	85	2.2 kg
22PEM-1UH	50	145	230	90	152	60	222	85	2.6 kg

Further documentation

- Overview MP Cooperation Partners
- Description Data-Pool Values
- BACnet Interface description
- Modbus Interface description
- Installation instructions
- Operating instructions
- Quick Guide – Belimo Assistant 2