Room sensor $CO_2$ / Humidity / Temperature

For measuring the temperature, humidity and $CO_2$ in the room. The room units can be seamlessly connected to existing third-party controllers. With MP-Bus communication and integrated 0...10 V output. The device is configured via NFC using Belimo Assistant 2.

## Type Overview

| Type | Communication | Output signal active $CO_2$ | Output signal active humidity | Output signal active temperature |
|---|---|---|---|---|
| 22RTM-19-1 | MP-Bus | 0...5 V, 0...10 V, 2...10 V | 0...5 V, 0...10 V, 2...10 V | 0...5 V, 0...10 V, 2...10 V |
| 22RTH-19-1 | MP-Bus | - | 0...5 V, 0...10 V, 2...10 V | 0...5 V, 0...10 V, 2...10 V |
| 22RT-19-1 | MP-Bus | - | - | 0...5 V, 0...10 V, 2...10 V |

## Technical data

| | | |
|---|---|---|
| **Electrical data** | Nominal voltage | AC/DC 24 V |
| | Nominal voltage range | AC 19.2...28.8 V / DC 19.2...28.8 V |
| | Power consumption AC | 1 VA |
| | Power consumption DC | 0.5 W |
| | Electrical connection | Spring loaded terminal 0.25...1.5 $mm^2$ |
| | Electrical connection note | 23-15 AWG, copper conductors only<br>Cable type USA and Canada: CL2 or higher |
| | Cable entry | Back side<br>Top side<br>Bottom side |
| **Data bus communication** | Communication | MP-Bus |
| | Number of nodes | MP-Bus max. 8 (16) |
| **Functional data** | Medium | Air |
| | Voltage output | 1 x 0...5 V, 0...10 V, 2...10 V, min. resistance 5 kΩ (Type 22RT-19-1)<br>2 x 0...5 V, 0...10 V, 2...10 V, min. resistance 5 kΩ (Type 22RTH-19-1)<br>3 x 0...5 V, 0...10 V, 2...10 V, min. resistance 5 kΩ (Type 22RTM-19-1) |
| | Output signal active note | Output 0...5 V, 0...10 V (factory setting), 2...10 V selectable via NFC |
| | Display | LED, The LED is used for the $CO_2$ TLF (traffic light function). The LED can be configured and deactivated via Belimo Assistant 2. (Type (P-)22RTM-..). |

## Technical data

| | | |
|---|---|---|
| **Measuring data** | Measured values | $CO_2$<br>Relative humidity<br>Dew point<br>Temperature |
| **Specification $CO_2$** | Sensing element technology | Non-dispersive infrared (NDIR) dual channel |
| | Measuring range | Default setting: 0...2000 ppm |
| | Accuracy | ±(50 ppm + 2% of measured value) |
| | Long term stability | ±20 ppm p.a. |
| **Specification temperature active** | Measuring range | 0...50°C [32...122°F]<br>(default setting) |
| | Accuracy temperature | ±0.3°C @ 25°C [±0.5°F @ 77°F] |
| | Long term stability | ±0.03°C p.a. @ 25°C [±0.05°F p.a. @ 77°F] |
| **Specification Humidity** | Measuring range | Default setting: 0...100% RH |
| | Measuring range dew point | Default setting: -50...50°C [-60...120°F] |
| | Accuracy | ±2% between 0...90% RH @ 25°C |
| | Long term stability | ±0.25% RH p.a. @ 25°C @ 50% RH |
| **Safety data** | Protection class IEC/EN | III, Safety Extra-Low Voltage (SELV) |
| | Power source UL | Class 2 Supply |
| | Degree of protection IEC/EN | IP30 |
| | EU Conformity | CE Marking |
| | Quality Standard | ISO 9001 |
| | UL Approval | cULus according to UL60730-1, CAN/CSA E60730-1 |
| | Type of action | Type 1 |
| | Rated impulse voltage supply | 0.5 kV |
| | Pollution degree | 2 |
| | Ambient humidity | Max. 95% RH, non-condensing |
| | Ambient temperature | 0...50°C [32...122°F] |
| | Storage temperature | -40...70°C [-40...160°F] |
| **Materials** | Housing | PC, white, RAL 9003<br>UL94V-0 |

## Safety notes

This device has been designed for use in stationary heating, ventilation and air-conditioning systems and must not be used outside the specified field of application. Unauthorised modifications are prohibited. The product must not be used in relation with any equipment that in case of a failure may threaten humans, animals or assets.

Ensure all power is disconnected before installing. Do not connect to live/operating equipment.

Only authorised specialists may carry out installation. All applicable legal or institutional installation regulations must be complied with during installation.

The device contains electrical and electronic components and must not be disposed of as household refuse. All locally valid regulations and requirements must be observed.

## Product Features

**$CO_2$ dual channel technology**

All $CO_2$ sensors are subject to drift, which is caused by the ageing process of the components and requires regular calibration and adjustment or replacement of the sensors. The dual-channel technology minimises this drift by compensating for the majority of the ageing effects of the measuring channel through adjustment with a reference channel.

This makes it possible to use dual-channel sensors in applications with 24/7 occupancy. Regular calibration with fresh outdoor air, as is the case with sensors with ABC logic, is not necessary with dual-channel sensors. It is recommended to recalibrate the sensor after 5 years of operation.

## Remarks

**General remarks concerning sensors**

The measuring result is influenced by the thermal characteristics of the wall. A solid concrete wall responds to thermal fluctuations within a room more slowly than a light-weight structure wall. A room sensor always detects a mixture of air and wall temperature. This means that the radiant heat of the wall, which is important for comfort, is also included in the measurement result.

**Remark: Occurring draft leads to a better carrying-off of dissipative power at the sensor. Thus temporally limited fluctuations might occur upon temperature measurement.**

**Build-up of self-heating by electrical dissipative power**

Temperature sensors with electronic components always have a dissipative power which affects the temperature measurement of the ambient air. The dissipation in active temperature sensors shows a linear increase with rising operating voltage. The dissipative power should be taken into account when measuring temperature.

Belimo room sensors have adaptive temperature compensation for the entire supply voltage range. This ensures that the ambient temperature is detected with the highest accuracy at all times.

**Application notice for humidity sensors**

The humidity sensor is extremely sensitive. Touching the sensor element or exposing it to aggressive substances like chlorine, ozone, ammonia, hydrogen peroxide or ethanol (i.e. as a cleaning agent) may affect the measurement accuracy.

Long term operation outside the recommended conditions (5...50°C and 20...80% RH) can result in a temporary offset. After returning into the recommended range, this effect disappears.

## Indicators and Operation

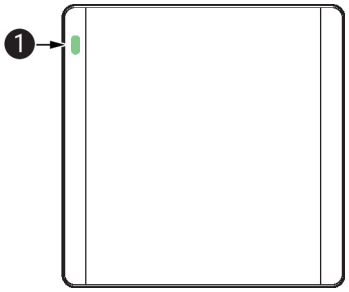


1 **$CO_2$ TLF (traffic light function), available on the (P-)22RTM-.. sensor**

Colours: green, yellow and red. LED can be configured and deactivated via Belimo Assistant 2.

## Parts included

Screws

## Accessories

**Tools**

| Description | Type |
|---|---|
| Service tool for wired and wireless setup, on-site operation and troubleshooting. | Belimo Assistant 2 |

## Accessories

| Description | Type |
|---|---|
| Belimo Assistant Link Bluetooth and USB to NFC and MP-Bus converter for configurable and communicative devices | LINK.10 |

## Service

**NFC connection**

Belimo devices marked with the NFC logo can be operated with Belimo Assistant 2.

Requirement:

- NFC- or Bluetooth-capable smartphone
- Belimo Assistant 2 (Google Play and Apple AppStore)

Align NFC-capable smartphone on the device so that both NFC antennas are superposed.

Connect Bluetooth-enabled smartphone via the Bluetooth-to-NFC converter ZIP-BT-NFC to the device. Technical data and operating instructions are shown in the ZIP-BT-NFC data sheet.

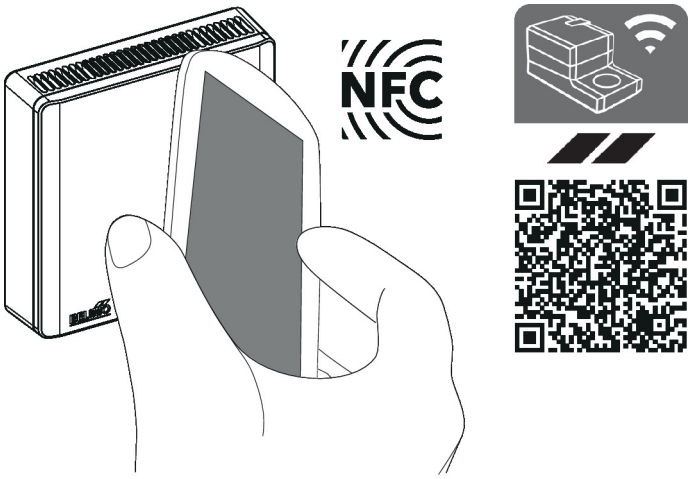


## Wiring diagram

**Analogue outputs: The analogue outputs AO1, AO2 and AO3 can be configured via NFC.**

**Factory settings:**

**AO1: Temperature**

**AO2: Humidity**

**AO3: $CO_2$**

## Wiring diagram

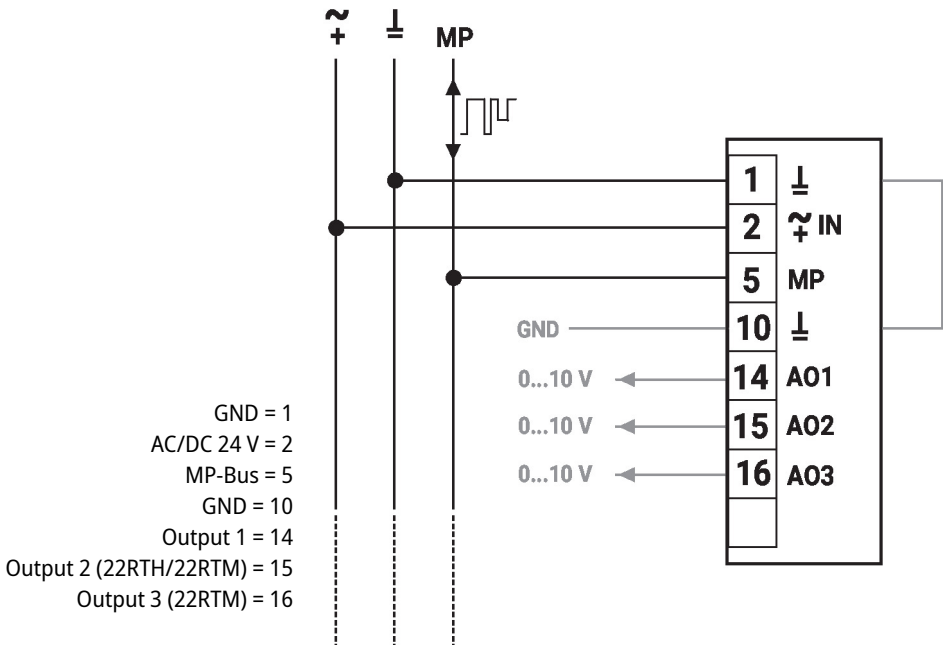

## Dimensions

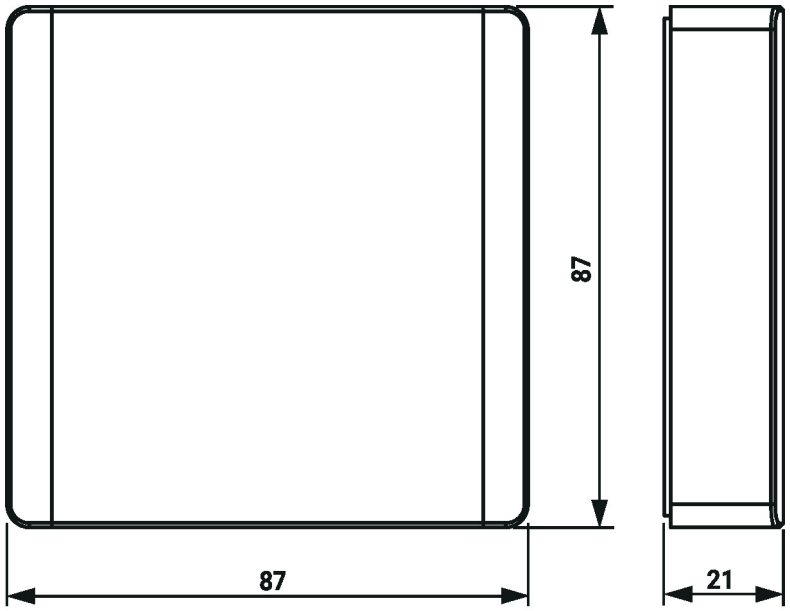


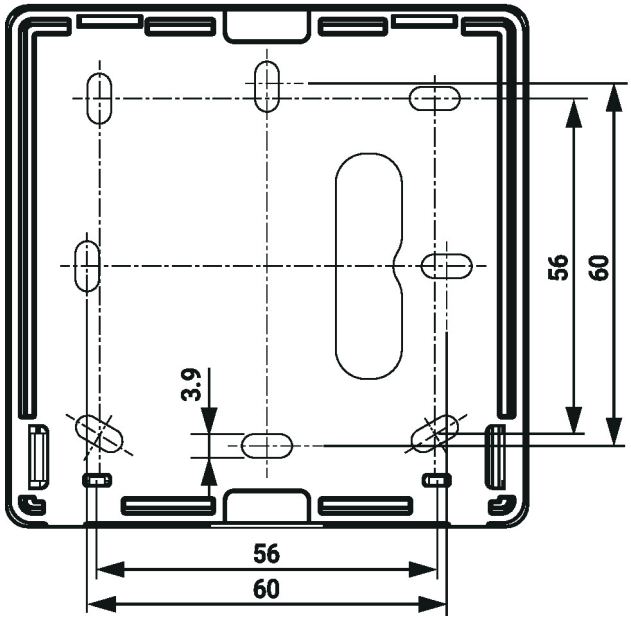


| Type | Weight |
|---|---|
| 22RTM-19-1 | 0.16 kg |
| 22RTH-19-1 | 0.090 kg |
| 22RT-19-1 | 0.090 kg |

## Further documentation

- Overview MP Cooperation Partners
- Description Data-Pool Values
- Installation instructions
- Quick Guide – Belimo Assistant 2