PI Zone Valve, 2-way, Internal thread

- For closed water systems
- For modulating control of air-handling and heating systems on the water side
- Snap-assembly of the actuator

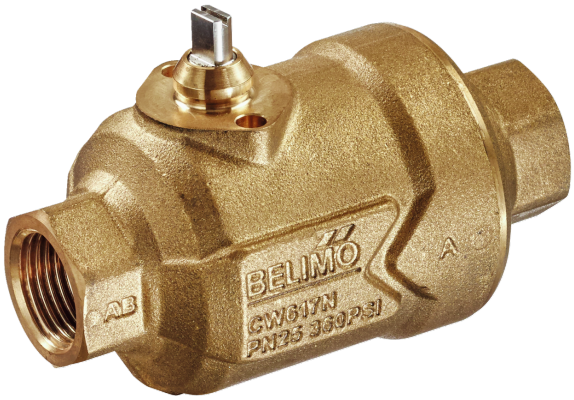

Picture may differ from product

Type overview

Type	DN	Rp ["]	V'nom [l/s]	V'nom [l/h]	V'nom [m³/h]	PN	n(gl)	Sv min.
C215QP-B	15	1/2	0.058	210	0.21	25	3.2	100
C215QP-D	15	1/2	0.117	420	0.42	25	3.2	100
C215QPT-B	15	1/2	0.058	210	0.21	25	3.2	100
C215QPT-D	15	1/2	0.117	420	0.42	25	3.2	100
C220QP-F	20	3/4	0.272	980	0.98	25	3.2	100
C220QPT-F	20	3/4	0.272	980	0.98	25	3.2	100
C225QPT-G	25	1	0.583	2100	2.1	25	3.2	100

PT = Version with measuring ports (P/T ports)

Technical data

Functional data	Fluid	Water, water with glycol up to max. 50% vol.
	Fluid temperature	-20...120°C [-4...248°F]
	Fluid temperature note	with actuator 2...90°C
	Differential pressure	16...350 kPa
	Close-off pressure Δps	1400 kPa
	Differential pressure Δpmax	350 kPa
	Flow characteristic	equal percentage (VDI/VDE 2173), optimised in the opening range
	Pressure stability	±5% with a pressure value of 35...350 kPa ±10% with a pressure value of 16...35 kPa
	Leakage rate	air-bubble tight, leakage rate A (EN 12266-1)
	Flow setting	See installation instruction
	Angle of rotation	90°
	Angle of rotation note	Operating range 15...90°
	Pipe connection	Internal thread according to ISO 7-1
	Installation orientation	upright to horizontal (in relation to the spindle)
	Servicing	maintenance-free
Materials	Valve body	Brass
	Closing element	Stainless steel
	Spindle	Stainless steel
	Spindle seal	EPDM O-ring
	Seat	PTFE, O-ring EPDM
	Diaphragm	EPDM

Technical data

Materials	Diaphragm	EPDM
Terms	Abbreviations	V'nom = nominal flow with valve completely opened V'max = maximum flow, set by the angle of rotation limitation on the actuator Sv = Rangeability V'nom/V'min

Safety notes

- The valve has been designed for use in stationary heating, ventilation and air-conditioning systems and must not be used outside the specified field of application, especially in aircraft or in any other airborne means of transport.
- Only authorised specialists may carry out installation. All applicable legal or institutional installation regulations must be complied with during installation.
- The valve does not contain any parts that can be replaced or repaired by the user.
- The valve may not be disposed of as household refuse. All locally valid regulations and requirements must be observed.
- When determining the flow rate characteristic of controlled devices, the recognised directives must be observed.

Product features

Operating mode

The ball valve is adjusted by a rotary actuator. The actuator is controlled by a commercially available modulating or 3-point control system and moves the ball of the valve – the throttling device – to the position dictated by the control signal. Open the characterised control valve counterclockwise and close it clockwise.

Flow characteristic

Equal percentage flow control is ensured by the special design of the ball.

Constant flow volume

With a differential pressure of 16...350 kPa, a constant flow volume is achieved thanks to the integrated pressure regulating valve. Independently of the differential pressure through the valve, a valve authority of 1 is achieved. Even with pressure variations and in the partial load range, the flow rate remains constant with each respective opening position (angle of rotation) and ensures a steady control.

Measuring ports (P/T ports)

The C2..QPT-.. type valves have two measurement ports. The total drop in pressure across the valve can be determined using the measurement points at the valve inlet (P1) and outlet (P3).

The measurement ports can be used to easily establish whether the actual differential pressure across the valve is within the admissible range of 16...350 kPa. If it is, the valve operates independently of pressure and the correct flow rate is automatically ensured by the valve according to the setting table.

The differential pressure measurement can also be used to optimise the pump setting. This involves reducing the pump head until only the minimum differential pressure required (16 kPa) is still present across the valve at the point of lowest pressure (the furthest away from the pump in hydronic terms).

Accessories

Mechanical accessories

Description	Type
Spindle extension CQ	ZCQ-E
Flow limiter PIQCV	ZCQ-FL
Pipe connector for ball valve with internal thread DN 15 Rp 1/2"	ZR2315
Pipe connector for ball valve with internal thread DN 20 Rp 3/4"	ZR2320
Pipe connector for ball valve with internal thread DN 25 Rp 1"	ZR2325

Installation notes

Permissible installation orientation

The ball valve can be installed upright to horizontal. The ball valve may not be installed in a hanging position, i.e. with the spindle pointing downwards.

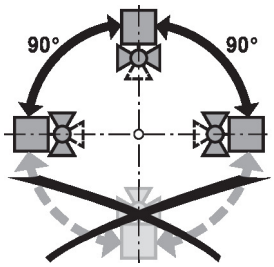

Installation in return

Installation in the return is recommended.

Water quality requirements

The water quality requirements specified in VDI 2035 must be adhered to.

Belimo valves are regulating devices. For the valves to function correctly in the long term, they must be kept free from particle debris (e.g. welding beads during installation work). The installation of a suitable strainer is recommended.

Servicing

Ball valves and rotary actuators are maintenance-free.

Before any service work on the control element is carried out, it is essential to isolate the rotary actuator from the power supply (by unplugging the electrical cable if necessary). Any pumps in the part of the piping system concerned must also be switched off and the appropriate slide valves closed (allow all components to cool down first if necessary and always reduce the system pressure to ambient pressure level).

The system must not be returned to service until the ball valve and the rotary actuator have been correctly reassembled in accordance with the instructions and the pipeline has been refilled by professionally trained personnel.

Flow direction

The direction of flow, specified by an arrow on the housing, is to be complied with, since otherwise the ball valve could become damaged. Please ensure that the ball for DN 15 and DN 20 is in the correct position (marking on the spindle).

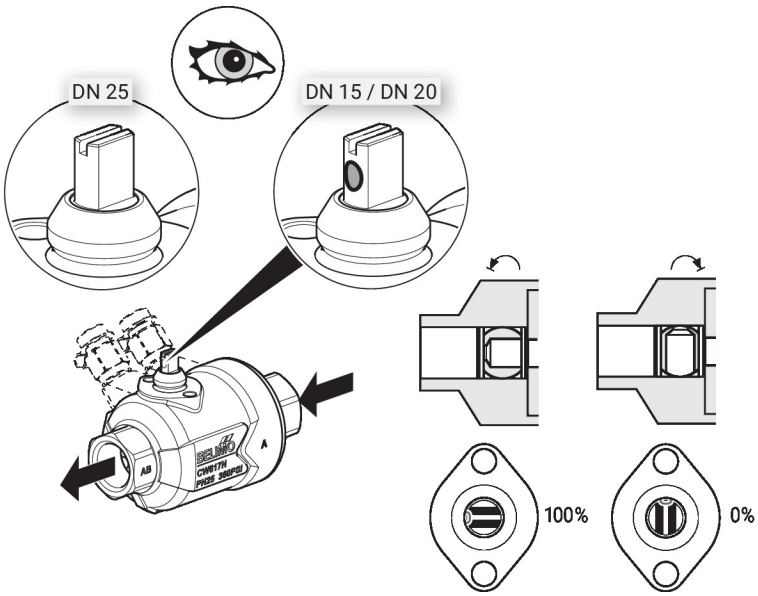

Installation notes

Flow setting

The angle of rotation of the CQ.. actuator can be changed by end stop clip in 2.5° increments. This is used to set the V'max-value (maximum flow rate of the valve).

Remove end stop clip and place at desired position.

After every change of the flow setting by means of end stop clip, an adaptation must be triggered on the modulating actuators.

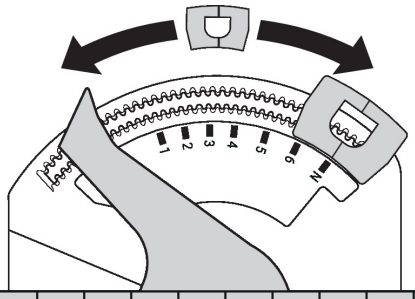

	Pos	1	2	3	3+	4-	4	4+	5-	5	5+	6-	6	6+	N-	N	
	Bus	41%	49%	56%	60%	63%	66%	68%	71%	74%	77%	79%	82%	85%	88%	91%	100%
	∢	37°	44°	51°	54°	57°	59°	61°	64°	67°	69°	71°	74°	77°	79°	82°	90°
C215QP(T)-B	V'max (l/h)	20	30	40	45	50	60	70	80	90	105	120	135	150	165	180	210
	V'max (l/s)	0.006	0.008	0.011	0.013	0.014	0.017	0.019	0.022	0.025	0.029	0.033	0.038	0.042	0.046	0.050	0.058
C215QP(T)-D	V'max (l/h)	50	70	100	110	130	150	170	190	210	240	270	300	330	360	400	420
	V'max (l/s)	0.014	0.019	0.028	0.031	0.036	0.042	0.047	0.053	0.058	0.067	0.075	0.083	0.092	0.100	0.111	0.117
C220QP(T)-F	V'max (l/h)	90	130	190	220	250	290	340	390	440	500	570	630	700	760	820	980
	V'max (l/s)	0.025	0.036	0.053	0.061	0.069	0.081	0.094	0.108	0.122	0.139	0.158	0.175	0.194	0.211	0.228	0.272
C225QPT-G	V'max (l/h)	260	410	600	670	750	840	920	1010	1110	1210	1310	1420	1530	1640	1750	2100
	V'max (l/s)	0.072	0.114	0.167	0.186	0.208	0.233	0.256	0.281	0.308	0.336	0.364	0.394	0.425	0.456	0.486	0.583

Dimensions

Dimensional drawings

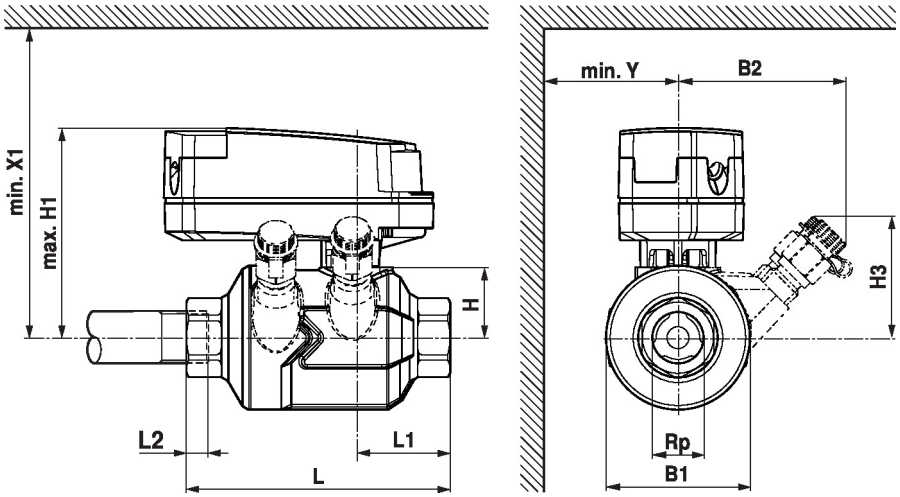

H1/X1: without spindle extension CQ
L2: Maximum screwing depth.

Dimensions

Type	DN	Rp [“]	L [mm]	L1 [mm]	L2 [mm]	B1 [mm]	B2 [mm]	H [mm]	H1 [mm]	H3 [mm]	X1 [mm]	Y [mm]	kg
C215QP-B	15	1/2	96	34	13	52		26	80		125	40	0.71
C215QPT-B	15	1/2	96	34	13	52	61	26	80	44	125	40	0.80
C215QP-D	15	1/2	96	34	13	52		26	80		125	40	0.71
C215QPT-D	15	1/2	96	34	13	52	61	26	80	44	125	40	0.80
C220QP-F	20	3/4	106	39	14	63		31	85		130	45	1.0
C220QPT-F	20	3/4	106	39	14	63	63	31	85	49	130	45	1.1
C225QPT-G	25	1	118	42	17	79	66	38	88	52	137	55	1.6

Further documentation

- Data sheets for actuators CQ..
- Installation instructions for zone valves and actuators
- General notes for project planning
- Notes for project planning for pressure-independent zone valve PIQCV