Stainless steel globe valve, 3-way, Internal thread

- For open and closed water systems
- For modulating control of air-handling and heating systems on the water side

Picture may differ from product

Type overview

Type	DN	Rp ["]	Kvs [m³/h]	Stroke	PN	n(gl)	Sv min.
H315S-G	15	1/2	1.6	10 mm	25	3	100
H315S-J	15	1/2	4.0	10 mm	25	3	100
H320S-K	20	3/4	6.3	10 mm	25	3	100
H325S-L	25	1	10	15 mm	25	3	100
H332S-M	32	1 1/4	16	20 mm	25	3	100
H340S-N	40	1 1/2	25	20 mm	25	3	100
H350S-P	50	2	40	20 mm	25	3	100

Technical data

Functional data	Fluid	Water, water with glycol up to max. 50% vol.
	Fluid temperature	0...130°C [32...266°F]
	Flow characteristic	Control path A – AB: equal percentage (VDI/VDE 2173), optimised in the opening range, Bypass B – AB: linear (VDI/VDE 2173)
	Leakage rate	Control path A – AB: max. 0.02% of the Kvs value; Bypass B – AB: max. 0.02% of the Kvs value (EN 1349 and EN 60534-4)
	Closing point	Top (▲)
	Pipe connection	Internal thread according to ISO 7-1
	Installation orientation	upright to horizontal (in relation to the spindle)
	Servicing	maintenance-free
Materials	Valve body	Stainless steel AISI 304
	Closing element	Stainless steel AISI 304
	Spindle	Stainless steel AISI 304
	Spindle seal	PTFE+FFKM
	Seat	Stainless steel AISI 304

Safety notes

- The valve has been designed for use in stationary heating, ventilation and air-conditioning systems and must not be used outside the specified field of application, especially in aircraft or in any other airborne means of transport.
- Only authorised specialists may carry out installation. All applicable legal or institutional installation regulations must be complied with during installation.
- The valve does not contain any parts that can be replaced or repaired by the user.
- The valve may not be disposed of as household refuse. All locally valid regulations and requirements must be observed.
- When determining the flow rate characteristic of controlled devices, the recognised directives must be observed.

Product features

Operating mode

The globe valve is adjusted by a globe valve actuator. The actuators are connected by a commercially available modulating or 3-point control system and move the valve cone, which acts as a throttling device, into the opening position dictated by the control signal.

Flow characteristic

An equal percentage flow characteristic is produced by the profile of the valve cone.

Fluid velocity

Standard values for low-noise operation in HVAC systems are fluid velocities of 1...2 m/s. At fluid velocities above 2 m/s, further flow effects like noise as well as cavitation can occur. This can reduce the service life of a valve depending on the situation.

Accessories

Electrical accessories

Description	Type
Stem heater for LV.., NV.., SV.. actuator	ZH24-1-A

Installation notes

Permissible installation orientation

The globe valve may be mounted upright to horizontal. It is not permissible to mount the globe valves with the stem pointing downwards.

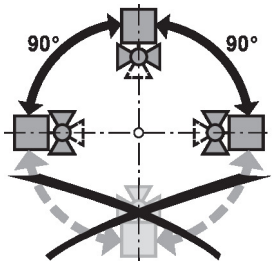

Water quality requirements

The water quality requirements specified in VDI 2035 must be adhered to.

Belimo valves are regulating devices. For the valves to function correctly in the long term, they must be kept free from particle debris (e.g. welding beads during installation work). The installation of a suitable strainer is recommended.

Servicing

Globe valves and globe valve actuators are maintenance-free.

Before any service work on the control element is carried out, it is essential to isolate the globe valve actuator from the power supply (by unplugging the electrical cables if necessary). Any pumps in the part of the piping system concerned must also be switched off and the appropriate slide valves closed (allow all components to cool down first if necessary and always reduce the system pressure to ambient pressure level).

The system must not be returned to service until the globe valve and the globe valve actuator have been reassembled correctly in accordance with the instructions and the pipeline has been refilled by professionally trained personnel.

Installation notes

Flow direction Direction of flow in both directions possible.

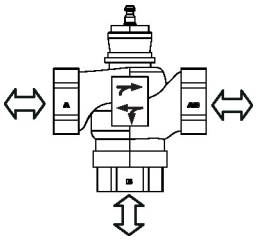

Differential and close-off pressure

The maximum differential and close-off pressure of globe valves depends on the mounted globe valve actuator. To ensure optimum operation and maximum service life, the maximum differential and close-off pressure in the table below must not be exceeded.

Mixing

p_s <2500 kPa (PN25) t= 0... 130°C		LV..A.. 500N		NV..A.. 1000N		SV..A.. 1500N	
	DN	Δps [kPa]	Δpmax [kPa]	Δps [kPa]	Δpmax [kPa]	Δps [kPa]	Δpmax [kPa]
H315S-G	15	650	650	800	800		
H315S-J	15	650	650	800	800		
H320S-K	20	650	650	800	800		
H325S-L	25	380	380	600	600		
H332S-M	32			550	550		
H340S-N	40			450	450	700	700
H350S-P	50			300	300	500	500

Diverting

p_s <2500 kPa (PN25) t= 0... 130°C		LV..A.. 500N		NV..A.. 1000N		SV..A.. 1500N	
	DN	Δps [kPa]	Δpmax [kPa]	Δps [kPa]	Δpmax [kPa]	Δps [kPa]	Δpmax [kPa]
H315S-G	15	325	325	400	400		
H315S-J	15	325	325	400	400		
H320S-K	20	325	325	400	400		
H325S-L	25	190	190	300	300		
H332S-M	32			270	270		
H340S-N	40			220	220	350	350
H350S-P	50			150	150	250	250

Dimensions

Dimensional drawings

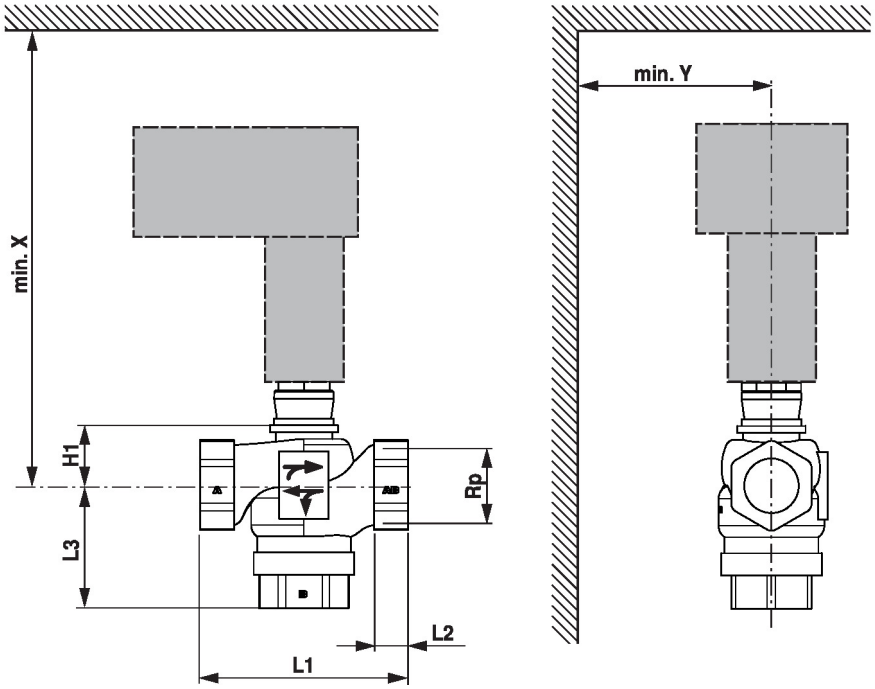

X/Y: Minimum distance with respect to the valve centre.
The actuator dimensions can be found on the respective actuator data sheet.

Type	DN	Rp [“]	L1 [mm]	L2 [mm]	L3 [mm]	H1 [mm]	X [mm]	Y [mm]	kg
H315S-G	15	1/2	81	15	56	29	296	100	0.80
H315S-J	15	1/2	81	15	56	29	296	100	0.82
H320S-K	20	3/4	86	15	56	28	299	100	0.96
H325S-L	25	1	115	17	64	34.5	303	100	1.33
H332S-M	32	1 1/4	122	19	76.5	35	306	100	1.72
H340S-N	40	1 1/2	140	23	83.5	43	311	100	2.29
H350S-P	50	2	158	25	95	56.5	318	100	3.15

Further documentation

- Data sheets for globe valve actuators
- Installation instructions for valves and/or globe valve actuators
- Notes for project planning 2-way and 3-way globe valves