Rotary actuator for ball valves

- Torque motor 4 Nm
- Nominal voltage AC/DC 24 V
- Control Open/close
- Running time motor 9 s

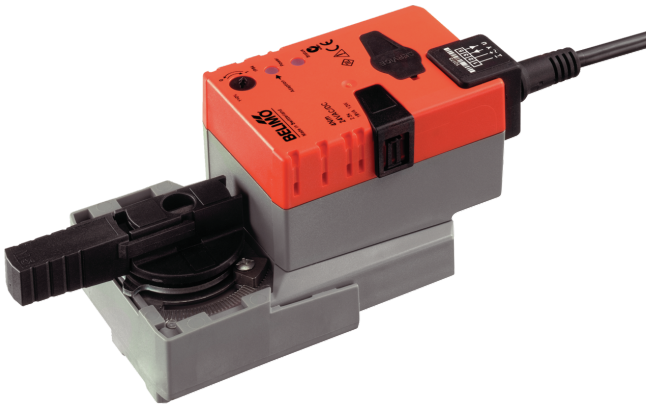

Picture may differ from product

Technical data

Electrical data	Nominal voltage	AC/DC 24 V
	Nominal voltage frequency	50/60 Hz
	Nominal voltage range	AC 19.2...28.8 V / DC 19.2...28.8 V
	Power consumption in operation	13 W
	Power consumption in rest position	2 W
	Power consumption for wire sizing	23 VA
	Inrush current (Imax)	20.0 A @ 5 ms
	Connection supply / control	Cable 1 m, 3x 0.75 mm^2
	Parallel operation	Yes (note the performance data)
Functional data	Torque motor	4 Nm
	Manual override	with push-button, can be locked
	Running time motor	9 s / 90°
	Sound power level, motor	45 dB(A)
	Position indication	Mechanical, pluggable
Safety data	Protection class IEC/EN	III, Safety Extra-Low Voltage (SELV)
	Power source UL	Class 2 Supply
	Degree of protection IEC/EN	IP54
	Degree of protection NEMA/UL	NEMA 2
	Housing	UL Enclosure Type 2
	EMC	CE according to 2014/30/EU
	Certification IEC/EN	IEC/EN 60730-1 and IEC/EN 60730-2-14
	UL Approval	cULus according to UL60730-1A, UL60730-2-14 and CAN/CSA E60730-1 The UL marking on the actuator depends on the production site, the device is UL-compliant in any case
	Type of action	Type 1
	Rated impulse voltage supply / control	0.8 kV
	Pollution degree	3
	Ambient humidity	Max. 95% RH, non-condensing
	Ambient temperature	-30...40°C [-22...104°F]
	Ambient temperature note	Caution: 40...50°C [104...122°F] utilisation possible only under certain restrictions. Please contact your supplier.
	Storage temperature	-40...80°C [-40...176°F]

Technical data

Safety data	Servicing	maintenance-free
Weight	Weight	0.99 kg

Safety notes

- This device has been designed for use in stationary heating, ventilation and air-conditioning systems and must not be used outside the specified field of application, especially in aircraft or in any other airborne means of transport.
- Outdoor application: only possible in case that no (sea) water, snow, ice, insolation or aggressive gases interfere directly with the device and that it is ensured that the ambient conditions remain within the thresholds according to the data sheet at any time.
- Only authorised specialists may carry out installation. All applicable legal or institutional installation regulations must be complied with during installation.
- The switch for changing the direction of rotation may only be operated by authorised specialists. The direction of rotation must not in particular be reversed in a frost protection circuit.
- The device may only be opened at the manufacturer's site. It does not contain any parts that can be replaced or repaired by the user.
- Cables must not be removed from the device.
- Self adaptation is necessary when the system is commissioned and after each adjustment of the angle of rotation (press the adaptation push-button once).
- The device contains electrical and electronic components and must not be disposed of as household refuse. All locally valid regulations and requirements must be observed.

Product features

Simple direct mounting
Straightforward direct mounting on the ball valve with only one central screw. The assembly tool is integrated in the plug-in position indicator. The mounting orientation in relation to the ball valve can be selected in 90° steps.

Manual override
Manual override with push-button possible (the gear train is disengaged for as long as the button is pressed or remains locked).

Adjustable angle of rotation
Adjustable angle of rotation with mechanical end stops.

High functional reliability
The actuator is overload protected, requires no limit switches and automatically stops when the end stop is reached.

Home position
The first time the supply voltage is switched on, i.e. at the time of commissioning, the actuator carries out an adaptation, which is when the operating range and position feedback adjust themselves to the mechanical setting range.

The detection of the mechanical end stops enables a gentle approach to the end positions, thus protecting the actuator mechanics.

The actuator then moves into the position defined by the control signal.

Factory setting: Y2 (counter-clockwise rotation).

Adaptation and synchronisation
An adaptation can be triggered manually by pressing the "Adaptation" button. Both mechanical end stops are detected during the adaptation (entire setting range). Automatic synchronisation after pressing the manual override button is configured. The synchronisation is in the home position (0%).

The actuator then moves into the position defined by the control signal.

Accessories

Electrical accessories

Description	Type
Auxiliary switch 1x SPDT add-on	S1A
Auxiliary switch 2x SPDT add-on	S2A

Accessories

Description	Type
Feedback potentiometer 140 Ω add-on	P140A
Feedback potentiometer 1 kΩ add-on	P1000A
Feedback potentiometer 10 kΩ add-on	P10000A

Electrical installation

Supply from isolating transformer.
Parallel connection of other actuators possible. Observe the performance data.
Direction of rotation switch is covered. Factory setting: Direction of rotation Y2.

Wire colours:
1 = black
2 = red
3 = white

AC/DC 24 V, open/close

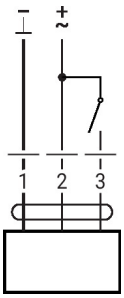

1	2	3	
L	L	–	A - AB = 0%
L	L	L	A - AB = 100%

Operating controls and indicators

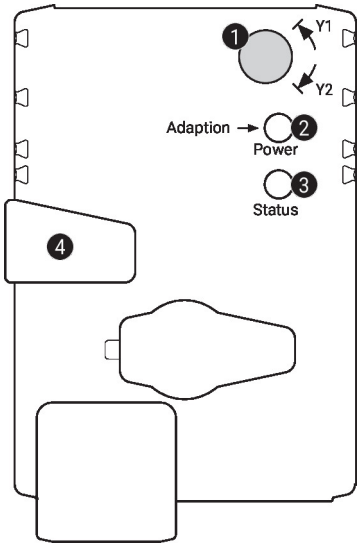

1 Direction of rotation switch

Switch over: Direction of rotation changes

2 Push-button and LED display green

Off: No power supply or malfunction
On: In operation
Press button: Triggers angle of rotation adaptation, followed by standard mode

3 Push-button and LED display yellow

Off: Standard mode
On: Adaptation or synchronisation process active
Press button: No function

4 Manual override button

Press button: Gear train disengages, motor stops, manual override possible
Release button: Gear train engages, standard mode

Check power supply connection

2 Off and 3 On Possible wiring error in power supply

Dimensions

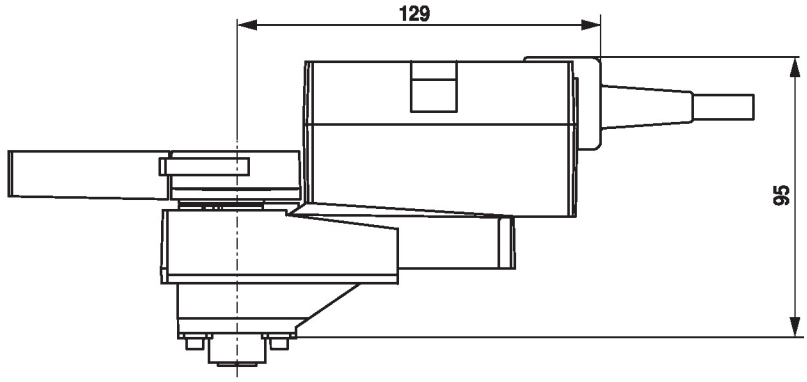

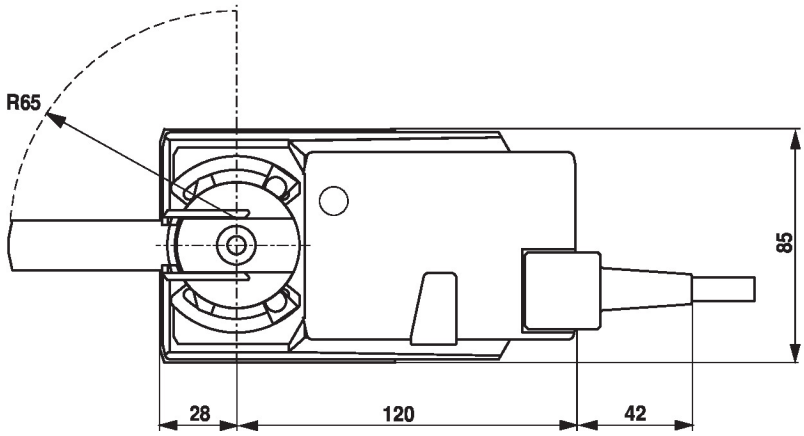

Further documentation

- The complete product range for water applications
- Data sheets for ball valves
- Installation instructions for actuators and/or ball valves
- General notes for project planning