Communicative damper actuator for adjusting dampers in technical building installations

- Air damper size up to approx. 2 m²
- Torque motor 10 Nm
- Nominal voltage AC/DC 24 V
- Control communicative
- Communication via BACnet MS/TP or Modbus RTU

Picture may differ from product

Technical data

Electrical data	Nominal voltage	AC/DC 24 V
	Nominal voltage frequency	50/60 Hz
	Nominal voltage range	AC 19.2...28.8 V / DC 21.6...28.8 V
	Power consumption in operation	3.5 W
	Power consumption in rest position	1.4 W
	Power consumption for wire sizing	6 VA
	Connection supply / control	Connector socket RJ12
Data bus communication	Communicative control	BACnet MS/TP Modbus RTU (factory setting)
	Number of nodes	BACnet / Modbus see interface description
Functional data	Torque motor	10 Nm
	Torque variable	25%, 50%, 75% reduced
	Direction of motion motor	selectable with switch 0/1
	Direction of motion variable	electronically reversible
	Direction of motion note	Y = 0%: At switch position 0 (ccw rotation) / 1 (cw rotation)
	Manual override	with push-button, can be locked
	Angle of rotation	Max. 95°
	Angle of rotation note	can be limited on both sides with adjustable mechanical end stops
	Running time motor	150 s / 90°
	Running time motor variable	43...173 s
	Sound power level, motor	35 dB(A)
	Adaptation setting range	manual
	Adaptation setting range variable	No action Adaptation when switched on Adaptation after pushing the manual override button
	Override control, controllable via bus communication	MAX (maximum position) = 100% MIN (minimum position) = 0% ZS (intermediate position) = 50%
	Override control variable	MAX = (MIN + 32%)...100% MIN = 0%...(MAX – 32%) ZS = MIN...MAX
	Mechanical interface	Universal shaft clamp 8...26.7 mm
	Position indication	Mechanical, pluggable
Safety data	Protection class IEC/EN	III, Safety Extra-Low Voltage (SELV)
	Power source UL	Class 2 Supply

Technical data

Safety data	Degree of protection IEC/EN	IP40 IP54 when using protective cap or protective grommet for RJ12 socket
	Degree of protection NEMA/UL	NEMA 1
	Housing	UL Enclosure Type 1
	EMC	CE according to 2014/30/EU
	Certification IEC/EN	IEC/EN 60730-1 and IEC/EN 60730-2-14
	UL Approval	cULus according to UL60730-1A, UL60730-2-14 and CAN/CSA E60730-1 The UL marking on the actuator depends on the production site, the device is UL-compliant in any case
	Hygiene test	According to VDI 6022 Part 1
	Type of action	Type 1
	Rated impulse voltage supply / control	0.8 kV
	Pollution degree	3
	Ambient humidity	Max. 95% RH, non-condensing
	Ambient temperature	-30...50°C [-22...122°F]
	Storage temperature	-40...80°C [-40...176°F]
	Servicing	maintenance-free
Weight	Weight	0.65 kg

Safety notes

- This device has been designed for use in stationary heating, ventilation and air-conditioning systems and must not be used outside the specified field of application, especially in aircraft or in any other airborne means of transport.
- Outdoor application: Only possible if no (sea) water, snow, ice, sunlight or aggressive gases act directly on the device and if it is ensured that the ambient conditions remain within the limit values specified in the data sheet at all times.
- Only authorised specialists may carry out installation. All applicable legal or institutional installation regulations must be complied with during installation.
- The device may only be opened at the manufacturer's site. It does not contain any parts that can be replaced or repaired by the user.
- To calculate the torque required, the specifications supplied by the damper manufacturers concerning the cross-section and the design, as well as the installation situation and the ventilation conditions must be observed.
- The device contains electrical and electronic components and must not be disposed of as household refuse. All locally valid regulations and requirements must be observed.

Product features

Operating mode
The actuator is fitted with an integrated interface for BACnet MS/TP and Modbus RTU, it receives the digital control signal from the control system and returns the current status.

Configurable device
The factory settings cover the most common applications. Single parameters can be modified with Belimo Assistant 2.

Simple direct mounting
Simple direct mounting on the damper shaft with a universal shaft clamp, supplied with an anti-rotation mechanism to prevent the actuator from rotating.

Manual override
Manual override with push-button possible (the gear train is disengaged for as long as the button is pressed or remains locked).

Adjustable angle of rotation
Adjustable angle of rotation with mechanical end stops.

High functional reliability
The actuator is overload protected, requires no limit switches and automatically stops when the end stop is reached.

Product features

Home position

The first time the supply voltage is switched on, i.e. at the time of commissioning, the actuator carries out a synchronisation. The synchronisation is in the home position (0%).

The actuator then moves into the position defined by the control signal.

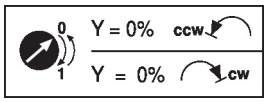

Adaptation and synchronisation

An adaptation can be triggered manually by pressing the "Adaptation" button or with Belimo Assistant 2. Both mechanical end stops are detected during the adaptation (entire setting range).

Automatic synchronisation after pressing the manual override button is configured. The synchronisation is in the home position (0%).

The actuator then moves into the position defined by the control signal.

A range of settings can be made using Belimo Assistant 2.

Accessories

Tools

Description	Type
Service tool for wired and wireless setup, on-site operation and troubleshooting.	Belimo Assistant 2
Belimo Assistant Link Bluetooth and USB to NFC and MP-Bus converter for configurable and communicative devices	LINK.10
Connecting cable 5 m, A: RJ11 6/4 LINK.10, B: 6-pin for connection to service socket	ZK1-GEN
Connecting cable 5 m, A: RJ11 6/4 LINK.10, B: free wire end for connection to MP/PP terminal	ZK2-GEN

Electrical accessories

Description	Type
Auxiliary switch 1x SPDT add-on	S1A
Auxiliary switch 2x SPDT add-on	S2A
Feedback potentiometer 140 Ω add-on	P140A
Feedback potentiometer 1 kΩ add-on	P1000A
Feedback potentiometer 10 kΩ add-on	P10000A

Mechanical accessories

Description	Type
Grommet for RJ connection module, Multipack 50 pcs.	Z-STRJ.1
Shaft extension 170 mm ø10 mm for damper shaft ø6...16 mm	AV6-20
Shaft clamp one-sided, clamping range ø6...20 mm, Multipack 20 pcs.	K-ELA
Shaft clamp one-sided, clamping range ø6...10 mm, Multipack 20 pcs.	K-ELA10
Shaft clamp one-sided, clamping range ø6...13 mm, Multipack 20 pcs.	K-ELA13
Shaft clamp one-sided, clamping range ø6...16 mm, Multipack 20 pcs.	K-ELA16
Anti-rotation mechanism 180 mm, Multipack 20 pcs.	Z-ARS180
Form fit insert 8x8 mm, Multipack 20 pcs.	ZF8-LMA
Form fit insert 10x10 mm, Multipack 20 pcs.	ZF10-LMA
Form fit insert 12x12 mm, Multipack 20 pcs.	ZF12-LMA
Form fit insert 8x8 mm, with angle of rotation limiter and position indicator, Multipack 20 pcs.	ZFRL8-LMA
Form fit insert 10x10 mm, with angle of rotation limiter and position indicator, Multipack 20 pcs.	ZFRL10-LMA
Form fit insert 12x12 mm, with angle of rotation limiter and position indicator, Multipack 20 pcs.	ZFRL12-LMA
Position indicator, Multipack 20 pcs.	Z-PI

Electrical installation

Always fit feed pins in pairs!

Only attach and remove connecting cable when de-energised!

The wiring of the line for BACnet MS/TP / Modbus RTU is to be carried out in accordance with applicable RS-485 regulations.

Modbus / BACnet: Supply and communication are not galvanically isolated. COM and ground of the devices must be connected to each other.

Maximum cable length for star wiring <5 m.

Maximum baud rate for star wiring 38'400 Bd.

Functions:
C1 = D- (wire 6)
C2 = D+ (wire 7)

RJ12 socket

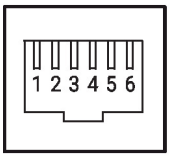

1 AC/DC 24 V
2 Com
3 D – (A)
4 D + (B)
5 AC/DC 24 V
6 Com

Operating controls and indicators

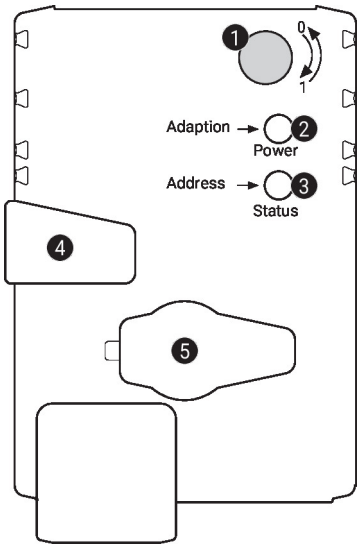

1 Direction-of-rotation switch

Switch over:	Direction of rotation changes

2 Push-button and LED display green

Off:	No power supply or malfunction
On:	In operation
Flashing:	In address mode: Pulses according to set address (1...16) When starting: Reset to factory setting (Communication)
Press button:	In standard mode: Triggers angle-of-rotation adaptation In address mode: Confirmation of set address (1...16)

3 Push-button and LED display yellow

Off:	Standard mode
On:	Adaptation or synchronisation process active or actuator in address mode (LED display green flashing)
Flickering:	BACnet / Modbus communication active
Press button:	In operation (>3 s): Switch address mode on and off In address mode: Address setting by pressing several times When starting (>5 s): Reset to factory setting (Communication)

4 Manual override button

Press button:	Gear train disengages, motor stops, manual override possible
Release button:	Gear train engages, synchronisation starts, followed by standard mode

5 Service plug
For connecting configuration and service tools

Check power supply connection

2 Off and 3 On	Possible wiring error in power supply

Service

Using Belimo Assistant 2, device parameters can be modified. Belimo Assistant 2 can operate on a smartphone, tablet or PC. The available connection options vary depending on the hardware on which Belimo Assistant 2 is installed.

For more information about Belimo Assistant 2, refer to the Quick Guide – Belimo Assistant 2.

Wired connection

Belimo devices can be accessed by connecting Belimo Assistant Link to the USB port on a PC or laptop and to the Service Socket or MP-Bus wire on the device.

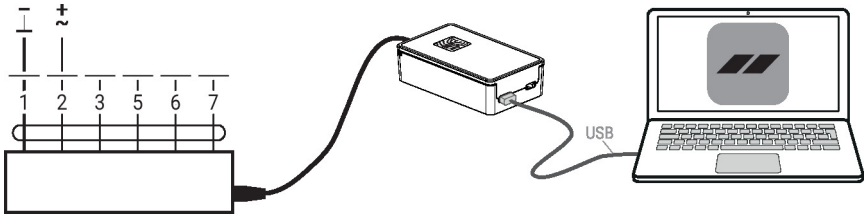

Quick addressing

1. Press the "Address" button until the green "Power" LED is no longer illuminated. The green "Power" LED flashes in accordance with the previously set address.

2. Set the address by pressing the "Address" button the corresponding number of times (1...16).

3. The green LED flashes in accordance with the address that has been entered (1...16). If the address is not correct, it can be reset in accordance with step 2.

4. Confirm the address setting by pressing the green "Adaptation" button.

If the address is not confirmed within 60 seconds, the address procedure will be ended. Any address change that has already been started will be discarded.

The resulting BACnet MS/TP and Modbus RTU address is made up of the set basic address plus the short address (e.g. 100+7=107).

Dimensions

Shaft length

	Min. 40
	Min. 20 mm [0.75"]

Clamping range

	8...26.7	≥8	≤26.7
*	8...20	≥8	≤20

*Option: Shaft clamp mounted below (accessories K-NA needed)

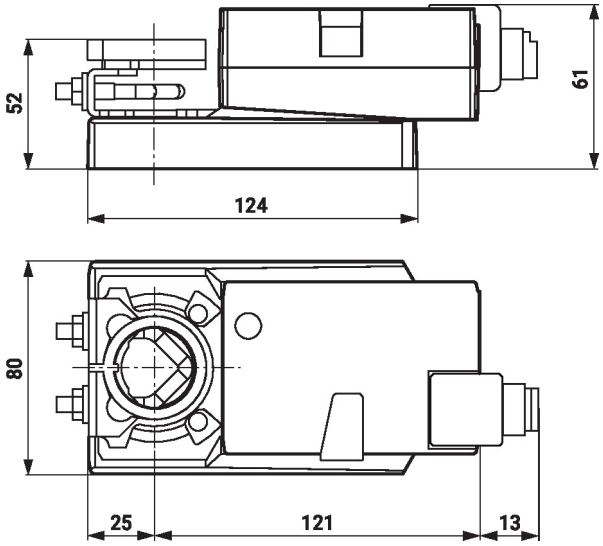

Further documentation

- Tool connections
- BACnet Interface description
- Modbus Interface description
- Quick Guide – Belimo Assistant 2

Application notes

- For digital control of actuators in VAV applications patent EP 3163399 must be considered.