3-point rotary actuator with fail-safe for ball valves

- Torque motor 5 Nm
- Nominal voltage AC 100...240 V
- Control 3-point
- Deenergised open (NO)
- With 2 integrated auxiliary switches

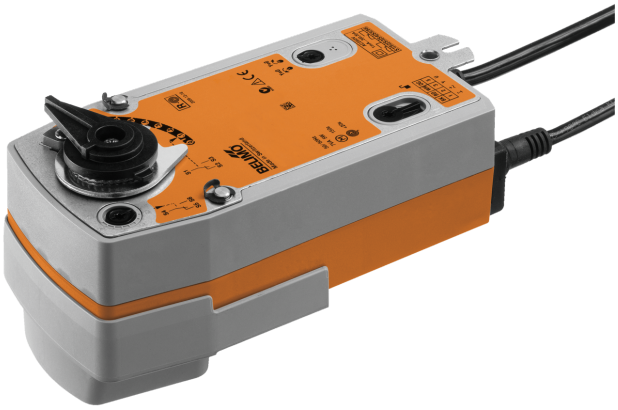

Picture may differ from product

## Technical data

| | | |
|---|---|---|
| **Electrical data** | Nominal voltage | AC 100...240 V |
| | Nominal voltage frequency | 50/60 Hz |
| | Nominal voltage range | AC 85...265 V |
| | Power consumption in operation | 5 W |
| | Power consumption in rest position | 3 W |
| | Power consumption for wire sizing | 16 VA |
| | Auxiliary switch | 2x SPDT, 1x 10% / 1x 11...100% |
| | Switching capacity auxiliary switch | 1 mA...3 A (0.5 A inductive), DC 5 V...AC 250 V |
| | Connection supply / control | Cable 1 m, 4x 0.75 $mm^2$ |
| | Connection auxiliary switch | Cable 1 m, 6x 0.75 $mm^2$ |
| | Parallel operation | Yes (note the performance data) |
| **Functional data** | Torque motor | 5 Nm |
| | Torque fail-safe | 5 Nm |
| | Direction of motion motor | Y = 0 (A–AB = 0%) |
| | Direction of motion fail-safe | Deenergised NO, valve open (A–AB = 100%) |
| | Direction of motion note | for valves with L-bore (A–AB = 0%) |
| | Manual override | No |
| | Running time motor | 35 s / 90° |
| | Running time fail-safe | <20 s @ -20...50°C, <60 s @ -30°C |
| | Sound power level, motor | 45 dB(A) |
| | Position indication | Mechanical |
| | Service life | Min. 60'000 fail-safe positions |
| **Safety data** | Protection class IEC/EN | II, reinforced insulation |
| | Protection class UL | II, reinforced insulation |
| | Protection class auxiliary switch IEC/EN | II, reinforced insulation |
| | Degree of protection IEC/EN | IP54 |
| | Degree of protection NEMA/UL | NEMA 2 |
| | Housing | UL Enclosure Type 2 |
| | EMC | CE according to 2014/30/EU |
| | Low voltage directive | CE according to 2014/35/EU |
| | Certification IEC/EN | IEC/EN 60730-1 and IEC/EN 60730-2-14 |
| | UL Approval | cULus according to UL60730-1A, UL60730-2-14 and CAN/CSA E60730-1<br>The UL marking on the actuator depends on the production site, the device is UL-compliant in any case |
| | Type of action | Type 1.AA.B |
| | Rated impulse voltage supply / control | 2.5 kV |
| | Rated impulse voltage auxiliary switch | 2.5 kV |

## Technical data

| | | |
|---|---|---|
| **Safety data** | Pollution degree | 3 |
| | Ambient humidity | Max. 95% RH, non-condensing |
| | Ambient temperature | -30...50°C [-22...122°F] |
| | Storage temperature | -40...80°C [-40...176°F] |
| | Servicing | maintenance-free |
| **Weight** | Weight | 2.1 kg |

## Safety notes

- This device has been designed for use in stationary heating, ventilation and air-conditioning systems and must not be used outside the specified field of application, especially in aircraft or in any other airborne means of transport.
- Outdoor application: Only possible if no (sea) water, snow, ice, sunlight or aggressive gases act directly on the device and if it is ensured that the ambient conditions remain within the limit values specified in the data sheet at all times.
- Caution: Mains voltage!
- Only authorised specialists may carry out installation. All applicable legal or institutional installation regulations must be complied with during installation.
- The device may only be opened at the manufacturer's site. It does not contain any parts that can be replaced or repaired by the user.
- Cables must not be removed from the device.
- The device contains electrical and electronic components and must not be disposed of as household refuse. All locally valid regulations and requirements must be observed.

## Product features

**Operating mode**
The actuator moves the valve to the operating position at the same time as tensioning the return spring. The valve is turned back to the fail-safe position by spring force when the supply voltage is interrupted.

**Simple direct mounting**
Simple direct mounting on the ball valve with only one screw. The mounting orientation in relation to the ball valve can be selected in 90° steps.

**Adjustable angle of rotation**
Adjustable angle of rotation with mechanical end stops.

**High functional reliability**
The actuator is overload protected, requires no limit switches and automatically stops when the end stop is reached.

**Flexible signalling**
The actuator has one auxiliary switch with a fixed setting and one adjustable auxiliary switch. They permit a 10% or 11...100% angle of rotation to be signaled.

## Electrical installation

**Caution: Mains voltage!**

**Parallel connection of other actuators possible. Observe the performance data.**

**Wire colours:**
1 = blue
2 = brown
3 = white
4 = white
S1 = violet
S2 = red
S3 = white
S4 = orange
S5 = pink
S6 = grey

## Electrical installation

AC 230 V, 3-point

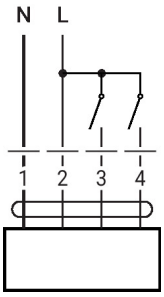


| 1 | 2 | 3 | 4 | Y = 0 | |
|---|---|---|---|---|---|
| | | | | 1 | A–AB = 100% |
| | | | | 0 | A–AB = 0% |
| | | | | stop | stop |
| | | | | 0 | A–AB = 0% |

Auxiliary switch

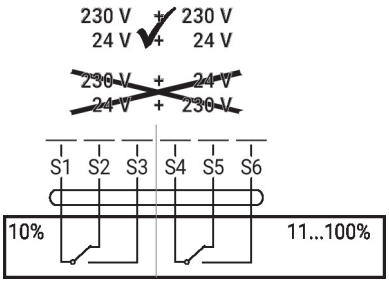


## Operating controls and indicators

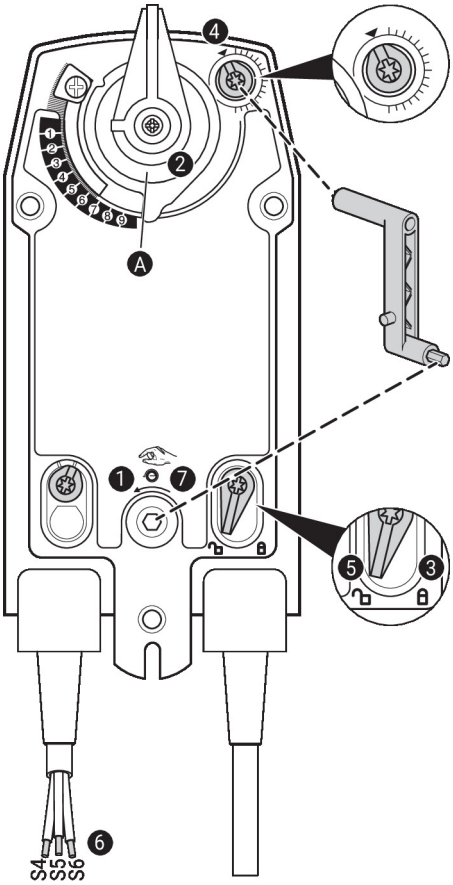


### Auxiliary switch settings

**Note:** Perform settings on the actuator only in deenergised state.

**For the auxiliary switch position settings, carry out points 1 to 7 successively.**

1. **Manual override**
   Turn the hand crank until the desired switching position is set.
2. **Shaft clamp**
   Edge line A displays the desired switching position of the actuator on the scale.
3. **Fasten the locking device**
   Turn the locking switch to the „Locked padlock“ symbol.
4. **Auxiliary switch**
   Turn rotary knob until the notch points to the arrow symbol.
5. **Unlock the locking device**
   Turn the locking switch to the „Unlocked padlock“ symbol or unlock with the hand crank.
6. **Cable**
   Connect continuity tester to S4 + S5 or to S4 + S6.
7. **Manual override**
   Turn the hand crank until the desired switching position is set and check whether the continuity tester shows the switching point.

## Dimensions

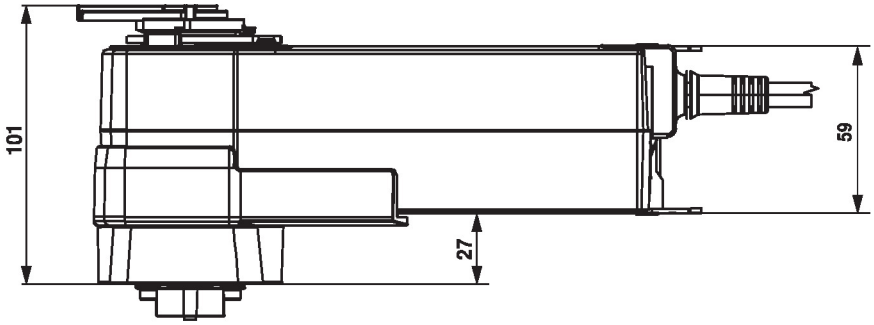


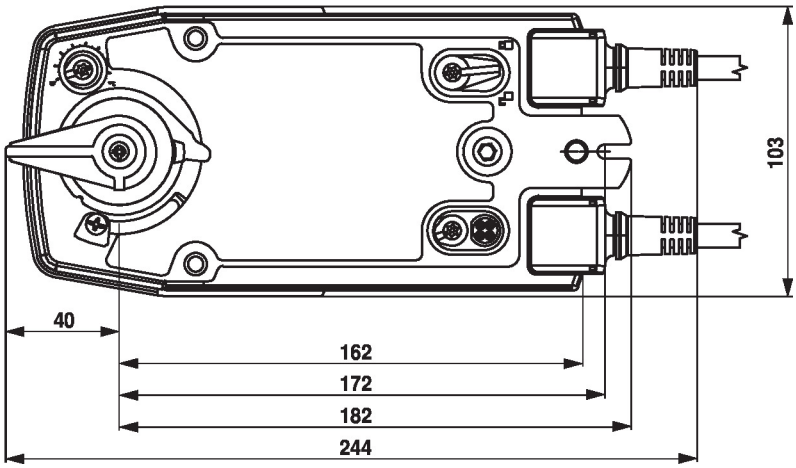


## Further documentation

- The complete product range for water applications
- Data sheets for ball valves
- Installation instructions for actuators and/or ball valves
- General notes for project planning