Auxiliary switch for damper actuators and rotary actuators

- one switch (SPDT)
- Adjustable switching point

Picture may differ from product

Technical data

Electrical data	Auxiliary switch	1x SPDT, 0...100%, adjustable
	Switching capacity auxiliary switch	1 mA...3 A (0.5 A inductive), DC 5 V...AC 250 V / 1 mA...0.5 A (0.2 A inductive; L/R = 3.4 ms), DC 5 V...DC 110 V
	Switching points auxiliary switch	Adjustable across the entire range of rotation 0...1 of the actuator. Presetting with scale possible.
	Connection auxiliary switch	Cable 1 m, 3 x 0.75 mm²
	Electrical connection	Cable
Safety data	Protection class IEC/EN	II, reinforced insulation
	Protection class UL	II, reinforced insulation
	Degree of protection IEC/EN	IP54
	Degree of protection NEMA/UL	NEMA 2
	Housing	UL Enclosure Type 2
	EMC	CE according to 2014/30/EU
	Low voltage directive	CE according to 2014/35/EU
	Certification IEC/EN	IEC/EN 60730-1 and IEC/EN 60730-2-14
	UL Approval	cULus according to UL60730-1A, UL60730-2-14 and CAN/CSA E60730-1
	Hygiene test	According to VDI 6022 Part 1 / SWKI VA 104-01, cleanable and disinfectable, low emission
	Type of action	Type 1.B
	Rated impulse voltage auxiliary switch	4 kV
	Pollution degree	3
	Ambient humidity	Max. 95% RH, non-condensing
	Ambient temperature	-30...50°C [-22...122°F]
	Storage temperature	-40...80°C [-40...176°F]
	Servicing	maintenance-free
Weight	Weight	0.21 kg

Safety notes

- The device must not be used outside the specified field of application, especially not in aircraft or in any other airborne means of transport.
- Outdoor application: only possible in case that no (sea) water, snow, ice, insolation or aggressive gases interfere directly with the device and that it is ensured that the ambient conditions remain within the thresholds according to the data sheet at any time.
- Only authorised specialists may carry out installation. All applicable legal or institutional installation regulations must be complied with during installation.
- The device may only be opened at the manufacturer's site. It does not contain any parts that can be replaced or repaired by the user.
- Cables must not be removed from the device.
- The device contains electrical and electronic components and must not be disposed of as household refuse. All locally valid regulations and requirements must be observed.

Product features

Operating mode

A carrier plate uses adaptation to make a positive fit on the shaft clamp (damper actuators) or on the position indication (rotary actuators) and transfers the position directly to the switching cams of the micro switches.

Switching points can be freely selected with an adjustment dial. The current switch position can be read off at any time.

Application

The auxiliary switch unit is used for signaling the position or for exercising switching functions in any given angle setting.

Simple direct mounting

The auxiliary switches are attached directly by the shaft clamp (damper actuators) or on the position indication (rotary actuators). The guiding grooves between the housing and the switch ensure a tightly sealing fit.

Accessories

Mechanical accessories

Description	Type
Adapter for auxiliary switch and feedback potentiometer, Multipack 20 pcs.	Z-SPA

Electrical installation

Wire colours:
S1 = violet
S2 = red
S3 = grey

Wiring diagrams

Auxiliary switch

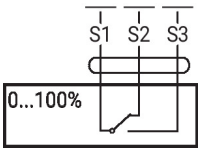

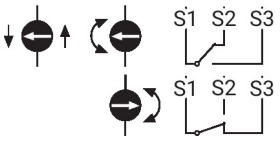

Operating controls and indicators

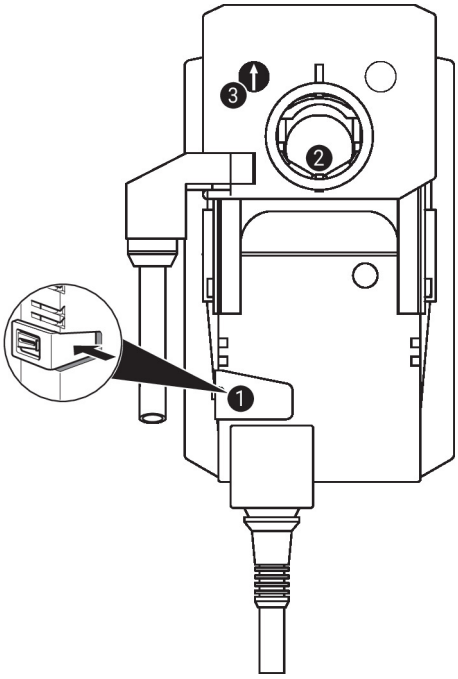

Auxiliary switch settings

⚠ **Note:** Perform settings on the auxiliary switch only in deenergised state.

For the auxiliary switch position settings, carry out points ❶ to ❸ successively.

❶ **Manual override button**
Holding button pressed down (or fix): Gear train disengages.
Manual override is possible.

❷ **Shaft clamp**
Turn the shaft clamp of the actuator into the desired switching position of the auxiliary switch

❸ **Auxiliary switch - 1**
Turn rotary knob until the arrow points to the vertical line.
Turn the shaft clamp ❷ and consider the arrow direction of the auxiliary switch rotary knob at the same time.
The arrow direction always indicates the switching position (S1-S2 or S1-S3).
If the auxiliary switch should switch in the opposite direction, rotate the auxiliary switch rotary knob by 180°. Alternatively the switching position can be checked with a continuity tester on the cable of the auxiliary switch.
Release (or disengage) button ❶.

Dimensions

	A		A
TM..A.., LM..A..	66	LMQ..A..	80
NM..A..	69	NMQ..A..	83
SM..A..	71	SMQ..A..	89
SMD..A..	71	NKQ..A..	87
GM..A..	78	GK..A..	94

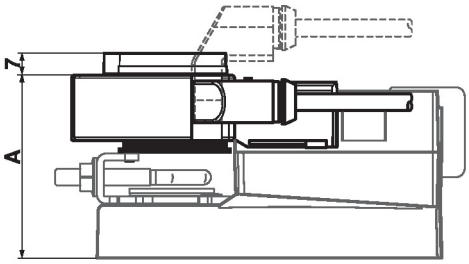

	A		A
TR..A.., LR..A..	66	LRQ..A..	80
NR..A..	69	NRQ..A..	83
SR..A..	71	GRK..A..	94
GR..A..	78		

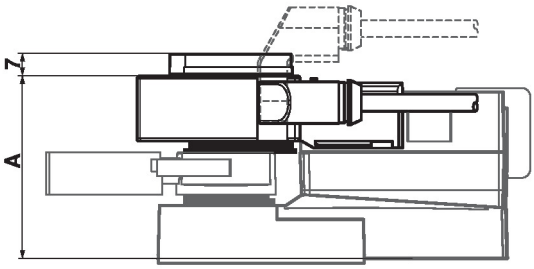

	A
DR..A..	78
DRK..A..	94

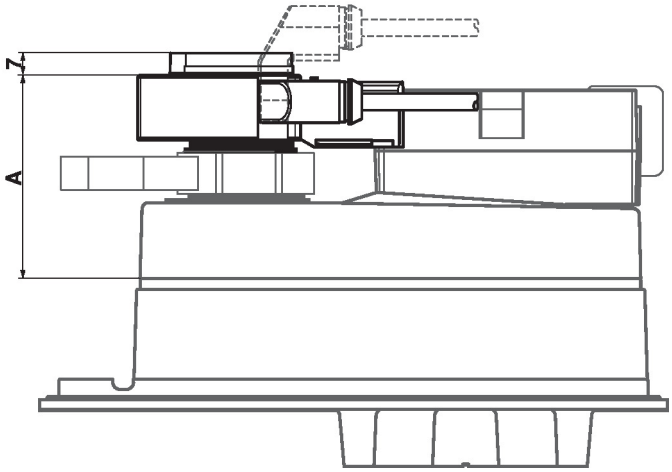

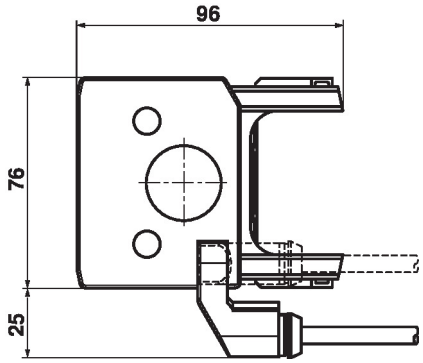

Type	Weight
S1A	0.21 kg