Pipe connector for ball valve with internal thread

- external thread R to internal thread Rp
- incl. sealing rings

Picture may differ from product

Type Overview

Type	DN	Rp ["]	R ["]	Suitable for	Weight
ZR2315	15	1/2	1/2	R2.. / R3.. / EP..R.. / EV..R.. DN 15	0.10 kg
ZR2320	20	3/4	3/4	R2.. / R3.. / EP..R.. / EV..R.. DN 20	0.16 kg
ZR2325	25	1	1	R2.. / R3.. / EP..R.. / EV..R.. DN 25	0.30 kg
ZR2332	32	1 1/4	1 1/4	R2.. / R3.. / EP..R.. / EV..R.. DN 32	0.40 kg
ZR2340	40	1 1/2	1 1/2	R2.. / R3.. / EP..R.. / EV..R.. DN 40	0.74 kg
ZR2350	50	2	2	R2.. / R3.. / EP..R.. / EV..R.. DN 50	1.4 kg

Technical data

Functional data	Fluid	Water, water with glycol up to max. 50% vol.
	Fluid temperature	-10...120°C [14...248°F]
Materials	Used materials	Nickel-plated brass

Safety notes

- This accessory has been designed for use in stationary heating, ventilation and air-conditioning systems and must not be used outside the specified field of application, especially in aircraft or in any other airborne means of transport.
- Only authorised specialists may carry out installation. All applicable legal or institutional installation regulations must be complied with during installation.
- The accessory may not be disposed of as household refuse. All locally valid regulations and requirements must be observed.

General notes

Delivery notes In the ZR23.. scope of delivery: 1 threaded element (Rp thread), 1 union nut, 1 insert (R thread), 1 o-ring.

Dimensions

Dimensional drawings

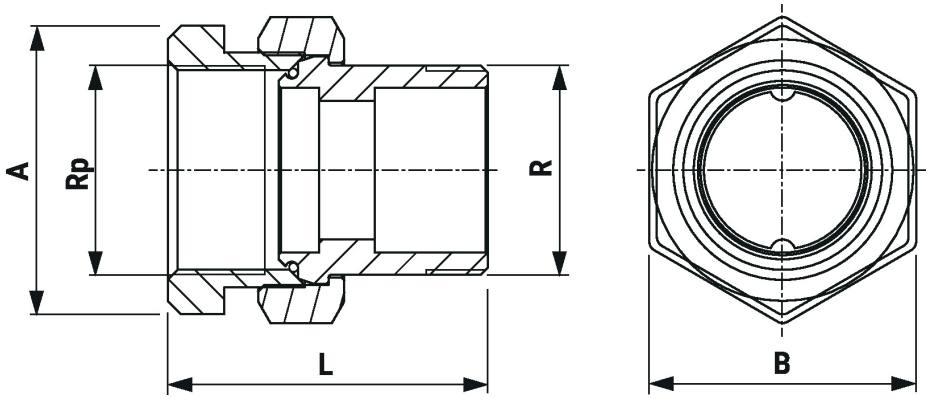

Type	DN	Rp ["]	R ["]	L [mm]	A [mm]	B [mm]	kg
ZR2315	15	1/2	1/2	49	25	30	0.12
ZR2320	20	3/4	3/4	57	31	37	0.16
ZR2325	25	1	1	66	38	46	0.30
ZR2332	32	1 1/4	1 1/4	71	48	52	0.40
ZR2340	40	1 1/2	1 1/2	78	55	64	0.66
ZR2350	50	2	2	89	65	81	1.10