Actuator for smoke control dampers 90°, with connection plugs for simple integration in control and monitoring systems

- Torque motor 15 Nm
- Nominal voltage AC/DC 24 V
- Control Open/close
- Mechanical interface Form fit 12x12 mm, continuous hollow shaft

Picture may differ from product

Technical data

Electrical data	Nominal voltage	AC/DC 24 V
	Nominal voltage frequency	50/60 Hz
	Nominal voltage range	AC 19.2...28.8 V / DC 21.6...28.8 V
	Switching thresholds min. ON voltage	AC 19.2 V / DC 21.6 V
	Switching thresholds max. OFF voltage	AC 5 V / DC 7 V
	Power consumption in operation	3 W
	Power consumption in rest position	0.1 W
	Power consumption for wire sizing	6 VA
	Inrush current (Imax)	8.2 A @ 5 ms
	Auxiliary switch	2x SPDT
	Switching capacity auxiliary switch	1 mA...3 A (0.5 A inductive), DC 5 V...AC 250 V
	Switching points auxiliary switch	5° / 80°
	Tolerance	±3°
	Connection supply / control	Cable with connector plug 1 m, 3x 0.75 mm^2, FRNC (halogen-free)
	Connection auxiliary switch	Cable with connector plug 1 m, 6x 0.75 mm^2, FRNC (halogen-free)
	Connection plug	Supply: plug 3-pole, suitable for BKNE230-24 Auxiliary switch: plug 6-pole, suitable for BKNE230-24
Functional data	Torque motor	15 Nm
	Direction of motion motor	selectable by mounting
	Manual override	with hand crank
	Angle of rotation	Max. 95°
	Running time motor	<30 s / 90°
	Sound power level, motor	58 dB(A)
	Mechanical interface	Form fit 12x12 mm, continuous hollow shaft
	Position indication	Mechanical, with pointer
	Service life	Min. 10'000 cycles
Safety data	Protection class IEC/EN	III, Safety Extra-Low Voltage (SELV)
	Protection class auxiliary switch IEC/EN	II, reinforced insulation
	Degree of protection IEC/EN	IP54
	EMC	CE according to 2014/30/EU
	Low voltage directive	CE according to 2014/35/EU
	Certification IEC/EN	IEC/EN 60730-1 and IEC/EN 60730-2-14
	Type of action	Type 1.B
	Rated impulse voltage supply / control	0.8 kV
	Rated impulse voltage auxiliary switch	4 kV
	Pollution degree	3

Technical data

Safety data	Ambient humidity	Max. 95% RH, non-condensing
	Ambient temperature	-30...55°C [-22...131°F]
	Storage temperature	-40...80°C [-40...176°F]
	Servicing	maintenance-free
Weight	Weight	0.88 kg

Safety notes

- The device must not be used outside the specified field of application, especially not in aircraft or in any other airborne means of transport.
- The actuator is adapted to and installed on the smoke control damper by the damper manufacturer. For this reason, the actuator is only supplied direct to safety damper manufacturers. The manufacturer then bears full responsibility for the proper functioning of the damper.
- The two switches integrated in the actuator are to be operated either on mains voltage or on safety extra-low voltage. The combination mains voltage/safety extra-low voltage is not permitted.
- Cables must not be removed from the device.
- The device may only be opened at the manufacturer's site. It does not contain any parts that can be replaced or repaired by the user.
- The device contains electrical and electronic components and must not be disposed of as household refuse. All locally valid regulations and requirements must be observed.

Product features

Operating mode

The open/close control is accomplished by means of the communication and power supply unit BKNE230-24.

Safety Position Lock™

The Safety Position Lock™ reliably holds the smoke control damper in the defined safety position in case of fire, thus ensuring maximum safety.

Manual override

The hand crank included in the shipment can be used for manual operation of the actuator.

Signalling

Two microswitches with fixed settings are installed in the actuator for indicating the damper end positions. It should be noted with this application however that the contacts can no longer be used in the milliampere range after larger currents have been applied to them, even if this has taken place only once.

The position of the damper blade can be read off on a mechanical position indicator.

Standards / Regulations

The design of the actuator is based on the specific requirements from the European standards:

• EN 12101-8: Smoke and heat control systems - Part 8: Smoke control dampers

• EN 1366-10: Fire resistance tests for service installations - Part 10: Smoke control dampers

• EN 13501-4: Fire classification of construction products and building elements - Part 4: Classification using data from fire resistance tests on components of smoke control systems

Connection

The actuator is equipped with connection plugs. This means that it can be integrated via superordinated communication and power supply units in the control and monitoring systems.

Connection plug

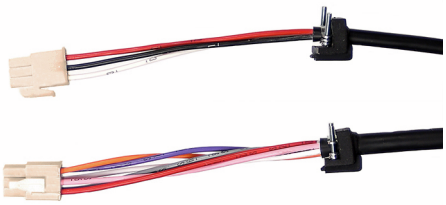

Parts included

Hand crank
Pointer
Protective bag

Accessories

Electrical accessories	Description	Type
	Auxiliary switch 2x SPDT	SN2-C7

Mechanical accessories	Description	Type
	Pointer 12x12 mm	ZZN12-B
	Hand crank 40 mm	ZKN1-B
	Hand crank 63 mm	ZKN2-B
	Protective bag with wire, Multipack 100 pcs.	ZSD-B.1
	Bracket for SN2-C7 for BFL, BFN, BFA, BEN, BEE	ZSN-B

Electrical installation

Supply from isolating transformer.

Parallel connection of other actuators possible. Observe the performance data and the switching thresholds.

Combination of mains voltage and safety extra-low voltage not permitted at the two auxiliary switches.

Wire colours:
1 = black
2 = red
3 = white
S1 = violet
S2 = red
S3 = white
S4 = orange
S5 = pink
S6 = grey

AC/DC 24 V, open/close

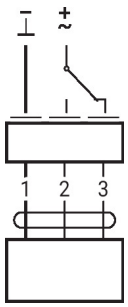

Auxiliary switch

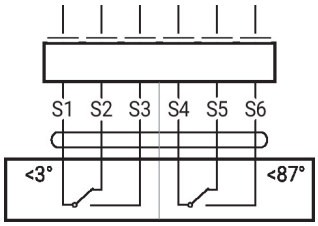
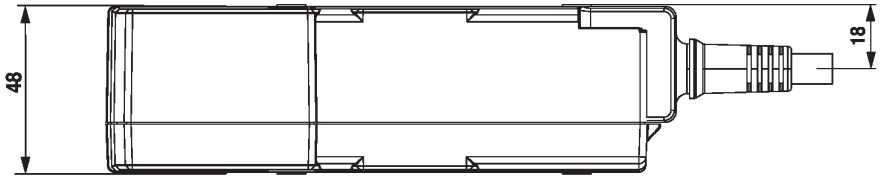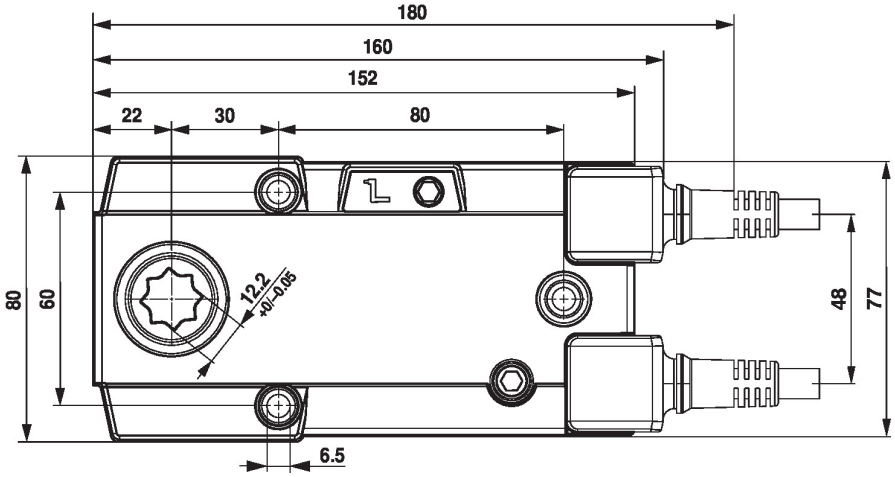
Dimensions