CR24-.. Single room controllers

Table of contents

Overview of the system	2
Overview of functions	3
Technical data sheets	
CR24-B1 / CR24-A1 Single room controllers	5
CR24-B2 / CR24-A2 Single room controllers	7
CR24-B2E / CR24-A2E Single room controllers	9
CR24-B3 / CR24-A3 Single room controllers	13
Operation	15
Functions	
Setpoint calculation	17
Energy hold off / Stand-by / VAV-function	18
Electric air heater / External temperature sensor / Supply air temperature limitation	19
External setpoint shift / Air flush	20
Change-over	21
Boost	22
Chilled ceiling	23
Rolling start / Excess temperature protection / Step control	24
Dimensions, Installation, commissioning, service	25

Overview of the system

Single room controllers

CR24-B1

CR24-B2

CR24-B2E

CR24-B3

VAV applications

Compact

Universal

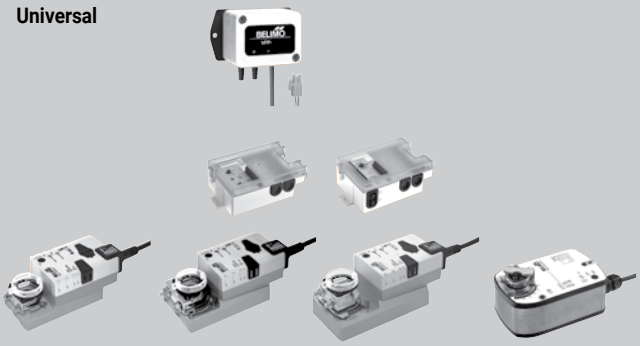

Water applications

Rotary actuators and characterised control valves

Air applications

Damper actuators

Brief description

The newly developed CR24-.. controller generation provides the foundation for modern single room concepts.
The technology, functionality and handling of the new microprocessor-controlled room temperature controllers are perfectly adapted to the Belimo actuators for motorised air and water final control elements.
The functional classification into three basic types with up to three output sequences and the large number of specific applications facilitate cost-effective system solutions for individually controlling the room climate and reducing energy consumption. The controllers can be used in both pure VAV and combined systems with 2- and 4-pipe water applications (radiators, air heaters/coolers, heated/chilled ceilings).

Device variants

Standard CR24-B.. type with operating elements (setpoint adjustment, mode switch and status indication). For operation, refer to page 15.

Type CR24-A..: same functionality as the CR24-B.. but without operating elements.

Notes
Unless otherwise expressly mentioned, all references contained in this document to the CR24-B.. also apply to the CR24-A...

Accessories

Mechanical accessories

Type	Description
CRZA-A	Spare cover for A-types
CRZA-B	Spare cover for B-types (with operating elements)
CRZW	Spare wall socket, fits all types

Overview of CR24-B.. functions

	CR24-B1	CR24-B2	CR24-B2E	CR24-B3
Power supply AC 24 V / 50/60Hz	•	•	•	•
Application / Temperature range				
– Room temperature control in comfort zone	•	•	•	•
– Internal temperature sensor (Type NTC, measuring range 10...45°C)	•	•	•	•
– Setpoint (adjustment range 15...36°C)	•	•	•	•
Operation (CR24-B.. only)	•	•	•	•
– Mode selection Switch: AUTO – ECO – MAX	•	•	•	•
– Mode indication LEDs: AUTO – ECO – MAX	•	•	•	•
– Setpoint adjustm. Rotary knob: ±3 K	•	•	•	•
Inputs Number	4	5	5	5
– Energy hold off	•	•	•	•
– Stand-by	• 1)	•	•	•
– Changeover	• 1)			• 2)
– Chilled ceiling with dew point limiting and changeover				• 2)
– Air flush		•	•	
– Boost			•	• 2)
– External temperature sensor (Type NTC, measuring range 10...45°C)	•	•	•	•
– External setpoint shift 0...10 V	•	•	•	•
Outputs Number	1	2	3	3
– (0)2...10 V system output for Belimo VAV controller or changeover	• 3)			
– (0)2...10 V system output for Belimo VAV controller		•	•	•
– Heating output 3-point		•	•	•
– Electric air heater 1...3 stages or on/close radiator valve			•	
– Heating or cooling output, changeover 0...10 V				• 4)
Functions				
– Control characteristics	P	P	P	P / PI
– P-band switchable	•	•	•	•
– Boost function V_{max} or temperature, selectable				•
– Boost function temperature			•	
– Volume increase in heating mode, selectable		•	•	•
– Internal function test, including nominal voltage test	•	•	•	•
– Commissioning mode with output and sequence simulation	•	•	•	•
– VAV controller diagnosis via integrated PC-Tool connection	•	•	•	•
Mounting Surface mounting with flush-mounted or surface-mounted connection	•	•	•	•
Housing colors Baseplate NCS 2005-R80B light grey (corresponds approx. to RAL 7035) Cover RAL 9003 signal white	•	•	•	•

1) The stand-by input is not available in changeover (C/O) mode or in heating controller applications as it is assigned to the changeover input function. CR24-B3 should be used if the stand-by function is needed in a changeover application.
2) The boost function is not available in changeover mode or in chilled ceiling applications with dew point limiting. A combination of changeover and dew point limiting is possible.
3) The output can either be used as a common cooling and heating output in changeover mode or exclusively as a cooling or heating output. The stand-by function is not available in changeover mode or in heating controller applications.
4) The output can either be used as a common cooling and heating output in changeover mode or exclusively as a cooling or heating output.

Temperature controller for single room applications with one analogue output:

- The analogue output ao1 can be used in VAV applications to contol one or more VAV controllers.
- In changeover applications, the analogue output ao1 can be changed over from cooling to heating mode via an input.

Device variant

Type CR24-A1, same functionality as the CR24-B1 but without operating elements.

Technical data

Electrical data	Nominal voltage	AC 24 V 50/60 Hz
	For wire sizing	3 VA, without actuators
	Nominal voltage range	AC 19.2...28.8 V
	Connections	Screw terminal max. 1.5mm²
Functional data	Control characteristics	P
	– P-band heating / cooling	Selectable: 1.5 / 1.0 K or 3.0 / 2.0 K
	External temperature sensor (ai1)	Type NTC, 5 kΩ, sensing range 10...45°C
	Heating setpoint	Range 15...36°C (default 21°C)
	– Energy hold off	Heating 15°C / cooling 40°C
	– Stand-by	Heating −2 K / cooling +3 K
	Dead band	1 K
	Frost limit temperature	10°C
	Operation (CR24-B.. only)	
	– Mode switch and status indication (LEDs)	AUTO (green) – ECO (orange) – MAX (red)
	– Rotary knob for setpoint adjustment	±3 K
	Communication port for field devices	2x PP (for PC-Tool)
Inputs	2x analogue, 2x digital	
	– External temperature sensor (ai1)	Type NTC, 5 kΩ, sensing range 10...45°C
	– External setpoint shift (ai2)	0...10 V corresponds to 0...10 K
	– Digital inputs (di1, di2)	Maximum current 10 mA
Outputs	1x analogue	
	– VAV system output (ao1)	(0)2 ... 10 V, max. 5 mA
Norms und standards	Protection class	III Safety extra-low voltage
	Degree of protection	IP30 according to EN 60529
	Mode of operation	Type 1 according to EN 60730-1
	Software class	A according to EN 60730-1
	EMC	EU conformity CE marking
	Ambient conditions	
	– Operation	0...50°C / 20...90% RH (without condensation)
	– Transport and storage	−25...70°C / 20...90% RH (without condensation)
Dimensions / Weight	Dimensions (HxWxD)	99x84x32 mm
	Weight	105 g
Housing colours	Baseplate	NCS 2005-R80B light grey (corresponds approx. to RAL 7035)
	Cover	RAL 9003 signal white

Safety notes

- The controller must not be used outside the specified field of application, especially in aircraft or in any other airborne means of transport.
- Only authorised specialists may carry out installation. All applicable legal or institutional installation regulations must be complied with during installation.
- The device may only be opened at the manufacturer's site. It does not contain any parts that can be replaced or repaired by the user.
- The device contains electrical and electronic components and must not be disposed of as household refuse. All locally valid regulations and requirements must be observed.

Product features

Energy hold off	In energy saving mode, the room temperature is reduced to building protection level, i.e. either the heating setpoint is significantly reduced or the cooling setpoint is significantly increased, for instance in a room with an open window.
Stand-by	The room temperature is reduced to stand-by level, i.e. either the heating setpoint is slightly reduced or the cooling setpoint is slightly increased, for instance in a room that is temporarily unoccupied.
Frost	The frost protection function is activated if the current room temperature falls below 10°C.
Changeover	Changeover heating or heating/cooling.
External temperature sensor	An external temperature sensor can be connected to the analogue input ai1, for instance in order to measure the average room temperature in the exhaust air duct.
External setpoint shift	An external 0...10 V signal at the analogue input ai2 can be used to shift the basic setpoint by 0...10 K, for instance for the summer/winter compensation.

These functions are described in detail on pages 17 to 24.

Configuration / Principle diagram

Configuration

DIP	Default settings	
1	P-band normal	P-band wide
2	Input di2 Stand-by	Input di2 Changeover

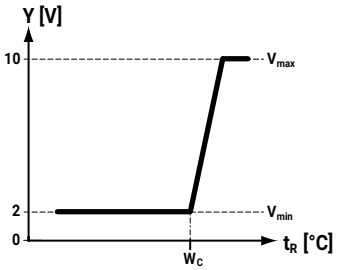

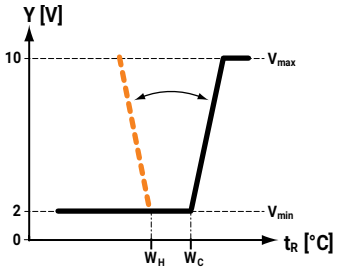

Key			
Y [V]	Output voltage in volt	V_{max}	Maximum volumetric flow
t_R [°C]	Room temperature in degrees Celsius	V_{min}	Minimum volumetric flow
W_H	Heating setpoint		
W_C	Cooling setpoint		

Electrical installation

Wiring diagram

Notes
- Connect via safety isolation transformer.
- Parallel connection of other actuators possible. Note the performance data.

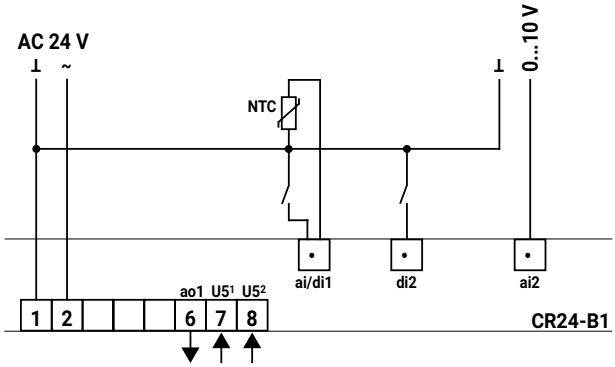

Inputs			Output		
3	ai1	External temperature sensor	6	ao1	System output for Belimo VAV controller
	di1	Energy hold off	Other connections		
4	di2	Stand-by / Changeover	7	PP1	Diagnostics socket 1
5	ai2	External setpoint shift	8	PP2	Diagnostics socket 2

Product information S4-CR24-... • en • v2.3 • 02.2026 • Subject to changes

Temperature controller for single room applications with two analog outputs:

- The analogue output ao1 can be used in VAV applications to contol one or more VAV controllers.
- The analogue heating output ao3 supplies a 3-point signal.

Device variant

Type CR24-A1, same functionality as the CR24-B1 but without operating elements.

Technical data

Electrical data	Nominal voltage	AC 24 V 50/60 Hz
	For wire sizing	3 VA, without actuators
	Nominal voltage range	AC 19.2...28.8 V
	Connections	Screw terminal max. 1.5mm²
Functional data	Control characteristics	P
	– P-band heating / cooling	Selectable: 1.5 / 1.0 K or 3.0 / 2.0 K
	External temperature sensor (ai1)	Type NTC, 5 kΩ, sensing range 10...45°C
	Heating setpoint	Range 15...36°C (default 21°C)
	– Energy hold off	Heating 15°C / cooling 40°C
	– Stand-by	Heating –2 K / cooling +3 K
	Dead band	1 K
	Frost limit temperature	10°C
	Operation (CR24-B.. only)	
	– Mode switch and status indication (LEDs)	AUTO (green) – ECO (orange) – MAX (red)
	– Rotary knob for setpoint adjustment	±3 K
	Communication port for field devices	2x PP (for PC-Tool)
Inputs	2x analogue, 3x digital	
	– External temperature sensor (ai1)	Type NTC, 5 kΩ, sensing range 10...45°C
	– External setpoint shift (ai2)	0...10 V corresponds to 0...10 K
	– Digital inputs (di1, di2, di3)	Maximum current 10 mA
Outputs	2x analogue	
	– VAV system output (ao1)	(0)2 ... 10 V, max. 5 mA
	– Heating output (ao3)	3-point, AC 24 V, max. source current 0.5 A / 10 VA (optimised for actuators with a running time of approx. 150 s)
Norms und standards	Protection class	III Safety extra-low voltage
	Degree of protection	IP30 according to EN 60529
	Mode of operation	Type 1 according to EN 60730-1
	Software class	A according to EN 60730-1
	EMC	EU conformity CE marking
	Ambient conditions	
	– Operation	0...50°C / 20...90% RH (without condensation)
	– Transport and storage	–25...70°C / 20...90% RH (without condensation)
Dimensions / Weight	Dimensions (HxWxD)	99x84x32 mm
	Weight	105 g
Housing colours	Baseplate	NCS 2005-R80B light grey (corresponds approx. to RAL 7035)
	Cover	RAL 9003 signal white

Safety notes

- The controller must not be used outside the specified field of application, especially in aircraft or in any other airborne means of transport.
- Only authorised specialists may carry out installation. All applicable legal or institutional installation regulations must be complied with during installation.
- The device may only be opened at the manufacturer's site. It does not contain any parts that can be replaced or repaired by the user.
- The device contains electrical and electronic components and must not be disposed of as household refuse. All locally valid regulations and requirements must be observed.

Product features

Energy hold off In energy saving mode, the room temperature is reduced to building protection level, i.e. either the heating setpoint is significantly reduced or the cooling setpoint is significantly increased, for instance in a room with an open window.

Stand-by The room temperature is reduced to stand-by level, i.e. either the heating setpoint is slightly reduced or the cooling setpoint is slightly increased, for instance in a room that is temporarily unoccupied.

Frost The frost protection function is activated if the current room temperature falls below 10°C.

Air flush The room can be ventilated with the maximum volumetric flow (Vmax), for instance in order to purge conference rooms, hotel rooms etc.

External temperature sensor An external temperature sensor can be connected to the analogue input ai1, for instance in order to measure the average room temperature in the exhaust air duct.

External setpoint shift An external DC 0...10 V signal at the analogue input ai2 can be used to shift the basic setpoint by 0...10 K, for instance for the summer/winter compensation.

These functions are described in detail on pages 17 to 24.

Configuration / Principle diagram

Configuration

DIP	Default settings	
1	P-band normal	P-band wide
2	V_{max} heating off	V_{max} heating 80%

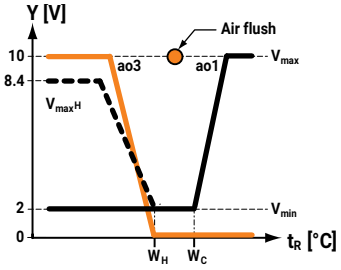

Key			
Y [V]	Output voltage in volt	ao..	Analogue outputs
t_R [°C]	Room temperature in degrees Celsius	V_{max}	Maximum volumetric flow
W_H	Heating setpoint	V_{maxH}	Maximum volumetric flow heating
W_C	Cooling setpoint	V_{min}	Minimum volumetric flow

Electrical installation

Wiring diagram

Notes
- Connect via safety isolation transformer.
- Parallel connection of other actuators possible. Note the performance data.

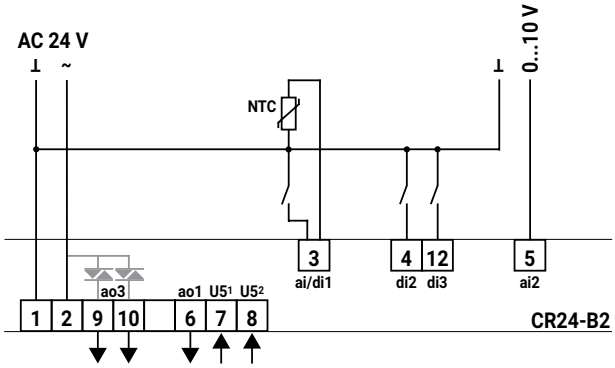

Inputs			Output		
3	ai1	External temperature sensor	6	ao1	System output for Belimo VAV controller
	di1	Energy hold off	9/10	ao3	Heating (3-point)
4	di2	Stand-by	Other connections		
5	ai2	External setpoint shift	7	PP1	Diagnostics socket 1
12	di3	Air flush	8	PP2	Diagnostics socket 2

Product information S4-CR24-.. • en • v2.3 • 02.2026 • Subject to changes

Temperature controller for single room applications with one analogue output and two digital outputs:

- The analogueg output ao1 for cooling, e.g. in VAV applications to contol one or more VAV controllers.
- The digital heating output do3 for
  - Electric air heater with one or two stages, in binary mode with three stages
  - open/close radiator valve

Device variant

Type CR24-A2E, same functionality as the CR24-B2E but without operating elements.

Technical data

Electrical data	Nominal voltage	AC 24 V 50/60 Hz
	For wire sizing	3 VA, without actuators
	Nominal voltage range	AC 19.2...28.8 V
	Connections	Screw terminal max. 1.5mm²
Functional data	Control characteristics	P
	– P-band heating / cooling	2 K with 2 resp. 3 stages / 2.0 K
	External temperature sensor (ai1)	Type NTC, 5 kΩ, sensing range 10...45°C
	Heating setpoint	Range 15...36°C (default 21°C)
	– Energy hold off	Heating 15°C / cooling 40°C
	– Stand-by	Heating –2 K / cooling +3 K
	Dead band	1 K
	Frost limit temperature	10°C
	Operation (CR24-B.. only)	
	– Mode switch and status indication (LEDs)	AUTO (green) – ECO (orange) – MAX (red)
	– Rotary knob for setpoint adjustment	±3 K
	Communication port for field devices	2x PP (for PC-Tool)
Inputs	2x analogue, 3x digital	
	– External temperature sensor (ai1)	Type NTC, 5 kΩ, sensing range 30...50°C
	– External setpoint shift (ai2)	0...10 V corresponds to 0...10 K
	– Digital inputs (di1, di2, di3)	Maximum current 10 mA
Outputs	1x analogue, 2x digital	
	– VAV system output (ao1)	(0)2 ... 10 V, max. 5 mA
	– Heating output (do3), 2 stages	Triac, AC 24 V, max. source current 0.5 A / 10 VA
Norms und standards	Protection class	III Safety extra-low voltage
	Degree of protection	IP30 according to EN 60529
	Mode of operation	Type 1 according to EN 60730-1
	Software class	A according to EN 60730-1
	EMC	EU conformity CE marking
	Ambient conditions	
	– Operation	0...50°C / 20...90% RH (without condensation)
	– Transport and storage	–25...70°C / 20...90% RH (without condensation)
Dimensions / Weight	Dimensions (HxWxD)	99x84x32 mm
	Weight	105 g
Housing colours	Baseplate	NCS 2005-R80B light grey (corresponds approx. to RAL 7035)
	Cover	RAL 9003 signal white

Safety notes

- The controller must not be used outside the specified field of application, especially in aircraft or in any other airborne means of transport.
- Only authorised specialists may carry out installation. All applicable legal or institutional installation regulations must be complied with during installation.
- The device may only be opened at the manufacturer's site. It does not contain any parts that can be replaced or repaired by the user.
- The device contains electrical and electronic components and must not be disposed of as household refuse. All locally valid regulations and requirements must be observed.

Product features

Energy hold off
In energy saving mode, the room temperature is reduced to building protection level, i.e. either the heating setpoint is significantly reduced or the cooling setpoint is significantly increased, for instance in a room with an open window.

Stand-by
The room temperature is reduced to stand-by level, i.e. either the heating setpoint is slightly reduced or the cooling setpoint is slightly increased, for instance in a room that is temporarily unoccupied.

Frost
The frost protection function is activated if the current room temperature falls below 10°C.

Boost
The room can be ventilated with the maximum volumetric flow (V_{max}) or heated up with the maximum capacity.

Supply air temperature limiter
An optionally mounted sensor allows to control the supply air temperature to a maximum of 50°C.

V_{max} at heating
For electric air heater the volumetric flow in heating mode can optionally be increased.

Output mode
The do3 output mode can be set accordingly to the application to
- stage for one-stage electric air heater or open/close radiator valve
- binary for two-stage electric air heater (stage I: 1/3, stage II: 2/3) which will be 1/3, 2/3, 3/3

Soft start (roll-out feature)
The built-in soft start and roll-out of the stage control provides temperature excess protection. This helps to avoid service calls due to switched-off safety chains and reduces the electrical load after a power-failure.

External setpoint shift
An external DC 0...10 V signal at the analogue input ai2 can be used to shift the basic setpoint by 0...10 K, for instance for the summer/winter compensation.

These functions are described in detail on pages 17 to 24.

Configuration / Principle diagram

Configuration

DIP	Default settings	
1	1 or 2 stage	Binary mode
2	V_{max} heating off	V_{max} heating on

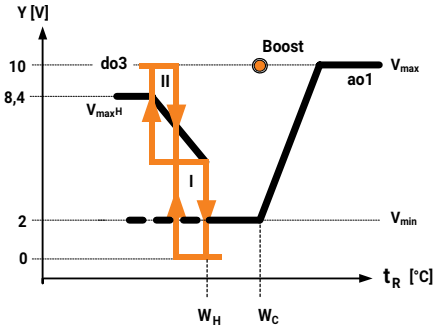

Key			
Y [V]	Output voltage in volt	ao1	Cooling output
t_R [°C]	Room temperature in degrees Celsius		System output for Belimo VAV controller
W_H	Heating setpoint	do3	Heating stage I
W_C	Cooling setpoint		Heating stage II
▼▲	Output on/off	V_{max}	Maximum volumetric flow
		V_{maxH}	Maximum volumetric flow heating
		V_{min}	Minimum volumetric flow

Electrical installation

Wiring diagram

Note
- Connect via safety isolation transformer.
- Parallel connection of other actuators possible. Note the performance data.

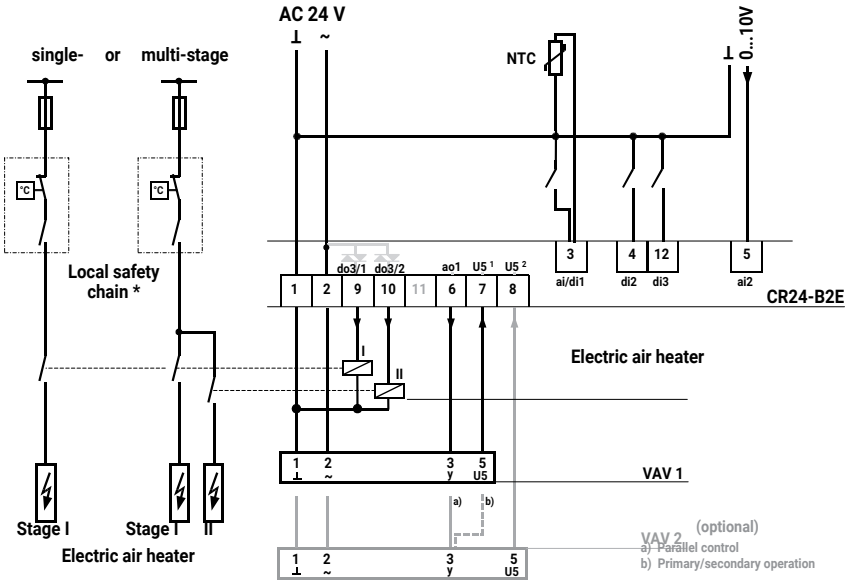

* Note:
Installation and safety circuit according to local laws and regulations!

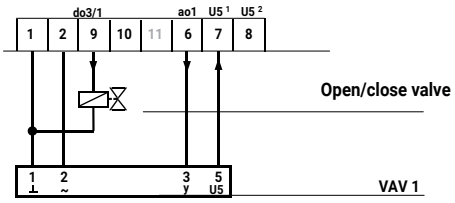

Inputs			Output			
3	ai1	Supply air temperature limiter	6	ao1	System output for Belimo VAV controller	
	di1	Energy hold off	9	do3/1	Heating stage I	Open/close radiator valve
4	di2	Stand-by	10	do3/2	Heating stage II	
5	ai2	External setpoint shift	Other connections			
12	di3	Boost	7	PP1	Diagnostics socket 1	
			8	PP2	Diagnostics socket 2	

Temperature controller for single room applications with three analogue outputs:

- The analogue output ao1 can be used in VAV applications to contol one or more VAV controllers.
- The analogue output ao2 can be used to control a heating or cooling sequence (changeover).
- The analogue heating output ao3 supplies a 3-point signal.

Application chilled ceiling certified by eu.bac Control Accurancy according to EN15500 = CA 0.7 eu.bac Cert 020718

Device variant

Type CR24-A3, same functionality as the CR24-B3 but without operating elements.

Technical data

Electrical data	Nominal voltage	AC 24 V 50/60 Hz
	For wire sizing	3 VA, without actuators
	Nominal voltage range	AC 19.2...28.8 V
	Connections	Screw terminal max. 1.5mm²
Functional data	Control characteristics	P / PI
	– P-band heating / cooling	Selectable: 1.5 / 1.0 K or 3.0 / 2.0 K
	External temperature sensor (ai1)	Type NTC, 5 kΩ, sensing range 10...45°C for example Belimo type TFK
	Heating setpoint	Range 15...36°C (default 21°C)
	– Energy hold off	Heating 15°C / cooling 40°C
	– Stand-by	Heating –2 K / cooling +3 K
	Dead band	1 K
	Frost limit temperature	10°C
	Operation (CR24-B.. only)	
	– Mode switch and status indication (LEDs)	AUTO (green) – ECO (orange) – MAX (red)
	– Rotary knob for setpoint adjustment	±3 K
	Communication port for field devices	2x PP (for PC-Tool)
Inputs	2x analogue, 3x digital	
	– External temperature sensor (ai1)	Type NTC, 5 kΩ, sensing range 10...45°C
	– External setpoint shift (ai2)	0...10 V corresponds to 0...10 K
	– Digital inputs (di1, di2, di3)	Maximum current 10 mA
Outputs	3x analogue	
	– VAV system output (ao1)	(0)2 ... 10 V, max. 5 mA
	– Heating / cooling output (ao2)	0...10 V, max. 5 mA
	– Heating output (ao3)	3-point, AC 24 V, max. source current 0.5 A / 10 VA (optimised for actuators with a running time of approx. 150 s)
Norms und standards	Protection class	III Safety extra-low voltage
	Degree of protection	IP30 according to EN 60529
	Mode of operation	Type 1 according to EN 60730-1
	Software class	A according to EN 60730-1
	EMC	EU conformity CE marking
	Ambient conditions	
	– Operation	0...50°C / 20...90% RH (without condensation)
	– Transport and storage	–25...70°C / 20...90% RH (without condensation)
Dimensions / Weight	Dimensions (HxWxD)	99x84x32 mm
	Weight	105 g
Housing colours	Baseplate	NCS 2005-R80B light grey (corresponds approx. to RAL 7035)
	Cover	RAL 9003 signal white

Safety notes

- The controller must not be used outside the specified field of application, especially in aircraft or in any other airborne means of transport.
- Only authorised specialists may carry out installation. All applicable legal or institutional installation regulations must be complied with during installation.
- The device may only be opened at the manufacturer's site. It does not contain any parts that can be replaced or repaired by the user.
- The device contains electrical and electronic components and must not be disposed of as household refuse. All locally valid regulations and requirements must be observed.

Product features

Energy hold off In energy saving mode, the room temperature is reduced to building protection level, i.e. either the heating setpoint is significantly reduced or the cooling setpoint is significantly increased, for instance in a room with an open window.

Stand-by The room temperature is reduced to stand-by level, i.e. either the heating setpoint is slightly reduced or the cooling setpoint is slightly increased, for instance in a room that is temporarily unoccupied.

Frost The frost protection function is activated if the current room temperature falls below 10°C.

Changeover Changeover heating or heating/cooling.

Chilled ceiling with dew point limiting If the temperature falls below the dew point, the corresponding output is set to 0.

Boost The room can be ventilated with the maximum volumetric flow (V_{max}) or heated or cooled with the maximum capacity.

External temperature sensor An external temperature sensor can be connected to the analog input ai1, for instance in order to measure the average room temperature in the exhaust air duct.

External setpoint shift An external DC 0...10 V signal at the analogue input ai2 can be used to shift the basic setpoint by 0...10 K, for instance for the summer/winter compensation.

These functions are described in detail on pages 17 to 24.

Configuration / Principle diagram

Configuration

DIP	Default settings	
1	P-band normal	P-band wide
2	V_{max} heating off	V_{max} heating 80%
3	Output ao2 Heating	Output ao2 Changeover Cooling
4	Input di3 Boost	Input di3 Changeover Dew point
5	Boost Temperatur	Boost V_{max}
6	Control characteristic PI	Control characteristic P

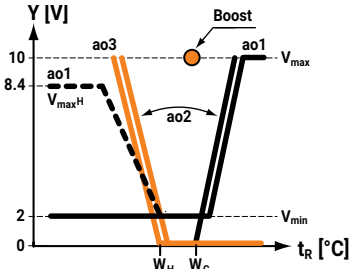

Key			
Y [V]	Output voltage in volt	ao..	Analogue outputs
t_R [°C]	Room temperature in degrees Celsius	V_{max}	Maximum volumetric flow
W_H	Heating setpoint	V_{maxH}	Maximum volumetric flow heating
W_C	Cooling setpoint	V_{min}	Minimum volumetric flow

Electrical installation

Wiring diagram

Note
- Connect via safety isolation transformer.
- Parallel connection of other actuators possible. Note the performance data.

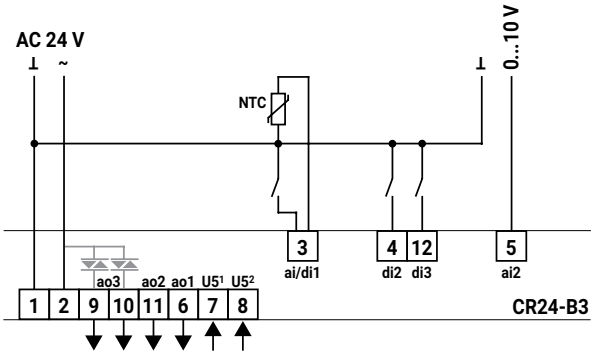

Inputs			Output		
3	ai1	External temperature sensor	6	ao1	System output for Belimo VAV controller
	di1	Energy hold off	9/10	ao3	Heating (3-point)
4	di2	Stand-by	11	ao2	Heating / Cooling
5	ai2	External setpoint shift	Other connections		
12	di3	Boost / Changeover / Dew point	7	PP1	Diagnostics socket 1
			8	PP2	Diagnostics socket 2

Product information S4-CR24-.. • en • v2.3 • 02.2026 • Subject to changes

Operator level 1 – Operation

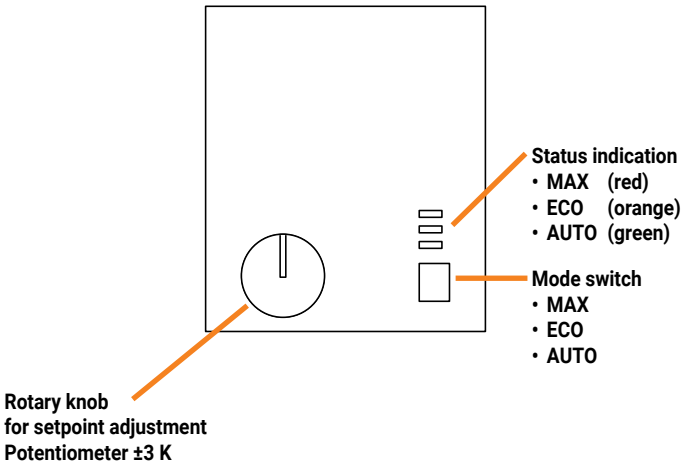

Operating mode / Setpoint — CR24-B.. only

Mode switch and status indication

There are three possible operating modes:

- **AUTO – optimum comfort mode**
  The room is heated, cooled or ventilated with the highest level of comfort, providing this is permitted by the external control signals. All the control functions (sequence control, boost function) are enabled.
- **ECO – optimum energy mode**
  The room is heated, cooled or ventilated with the stand-by settings, providing this is permitted by the external control signals. The heating setpoint is reduced in this mode (–2 K) and the cooling setpoint is increased (3 K). The room can be changed from "optimum energy" to "optimum comfort" in a very short time. Sequence control and the boost function are enabled. ECO mode is intended for rooms that are only irregularly occupied or at reduced demand.
- **MAX – boost function**
  The room is ventilated with the maximum volumetric air and heated or cooled with the maximum capacity, providing this is permitted by the external control signals.
  The boost function will be deactiveded:
  - **timer elapsed**
  - **setpoint reached (VAV fixed 15 minutes)**
  - **change to another mode (AUTO or ECO)**

Operator level 2 – Configuration

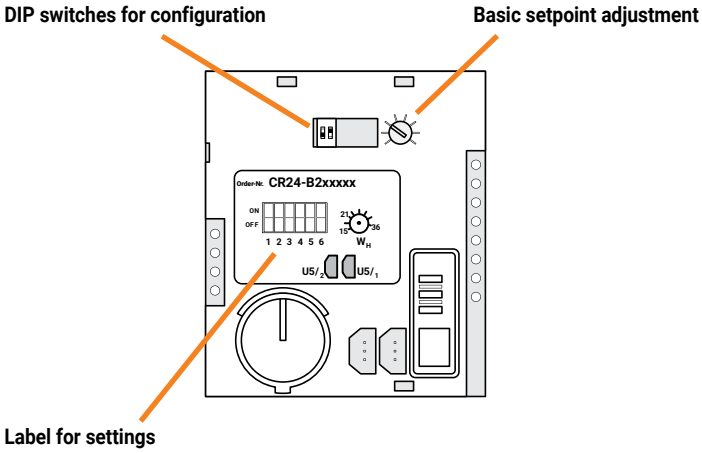

Application / Parameters — all CR24-..

DIP switches for configuration

DIP switches 1 and 2 (CR24-B1, BR24-B2 and CR24-B2E) or 1 to 6 (CR24-B3)

Basic setpoint adjustment WH (heating setpoint)

Potentiometer 15...36°C (default 21°C)

Label for settings

Used to record the selected settings (DIP switches and basic setpoint).

Operator level 3 – Service

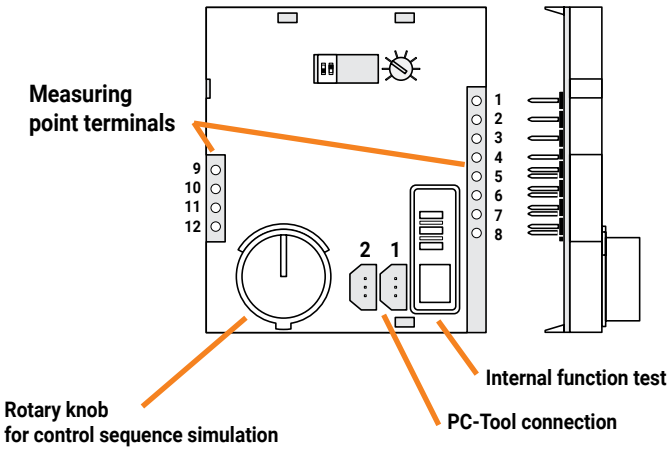

Test / Simulation — all CR24-..

Measuring point terminals

Measuring points for all terminals (also during operation)

Internal function test

A comprehensive internal function test, including a nominal voltage test (AC 24 V), can be started for the controller with the mode switch. The three LEDs (status indication) indicate the voltage level and the states.

Control sequence simulation

The connected actuators, and thus also the heating and cooling control sequences, can be simulated independently of the room temperature with the rotary knob for adjusting the setpoint.

PC-Tool connection

Diagnostics sockets 1 and 2 are used for PP communication with the connected Belimo MFT actuators or VAV controllers. As a result, physical access to the field devices is not required.

Introduction

CR24-B.. only

The control functions define the behaviour of the controller outputs and influence the current setpoint.
Both the level of comfort and the energy saving potential can be significantly enhanced by installing suitable sensors on the input side.
Please refer to the table on page 4 for an overview of the functions of the three basic CR24-B.. types. These functions are described in detail below.

Setpoint calculation

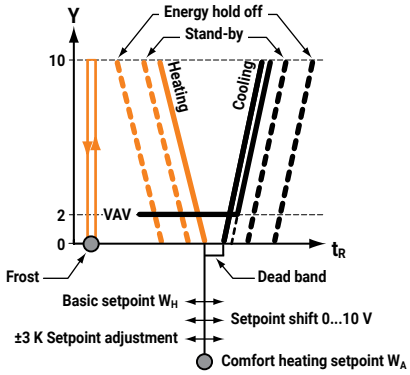

Operating status	Heating setpoint	Cooling setpoint
Comfort	Basic setpoint W_H ± 3 K setpoint adjustment + setpoint shift 0...10 V	Comfort heating setpoint W_A + 1 K dead band
Stand-by	Comfort heating setpoint W_A − 2 K stand-by offset heating	Comfort heating setpoint W_A + 1 K dead band + 3 K stand-by offset cooling
Energy hold off	Fixed 15°C (building protection)	Fixed 40°C (building protection)
Frost	Fixed 10°C	Not relevant

Examples

Comfort

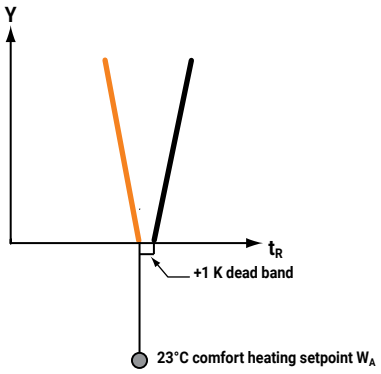

Stand-by

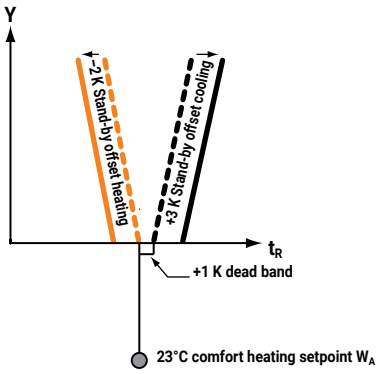

Energy hold off

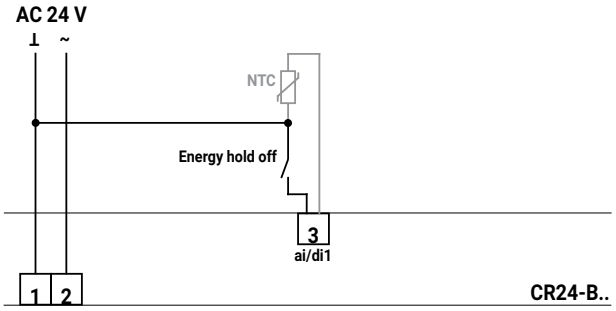

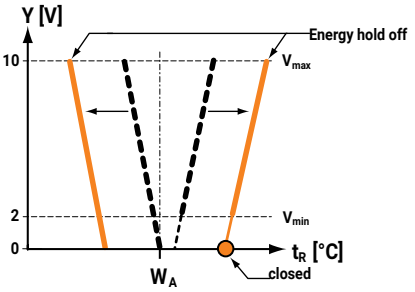

Key
Y Output signal
t_R Room temperature
W_A Current setpoint

Digital input di1 — all CR24-..

If a local detector (e.g. a window switch) acts on the digital input di1 and closes the corresponding contact, the room is adjusted to the building protection settings in energy saving mode. In other words, the heating setpoint is significantly reduced (15°C) or the cooling setpoint significantly increased (40°C), though not sufficiently to cause damage to sensitive objects (plants, paintings etc.).

Typical applications

- A window switch at di1 stops all energy consumption from the moment the window is opened until the lower or upper building protection limit is reached.
- Higher-level override command, e.g. building management system.

Notes

- The minimum VAV output is set to 0 V instead of 2 V while energy hold off is active (forced closing in 2...10 V).
- The mode switch (operator level 1) is deactivated while energy hold off is active (input di1 takes priority).
- If an external temperature sensor is used, the frost limit is monitored by the internal sensor while energy hold off is active.
- Due to the automatic sensor detection, the change to energy hold off takes about 40 seconds.

Stand-by

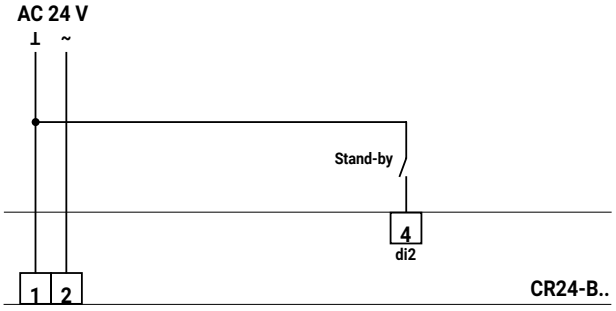

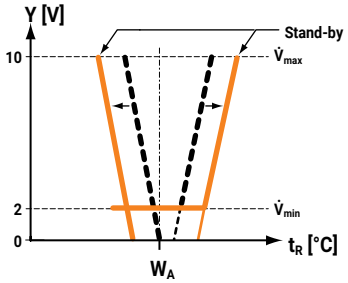

Key
Y Output signal
t_R Room temperature
W_A Current setpoint

Digital input di2 — all CR24-..

If a local detector (e.g. a motion detector) acts on the digital input di2 and closes the corresponding contact, the room is adjusted to the stand-by settings. In other words, the heating setpoint is reduced by 2 K or the cooling setpoint is increased by 3 K.

Typical applications

- A motion detector, a light switch or another detector at di2 reduces the energy consumption of unoccupied rooms.
- Higher-level override command, e.g. building management system.

VAV function: volumetric flow in heating mode (electric air heater) — CR24-B2 und CR24-B3 only

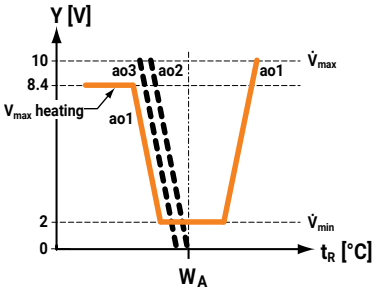

Key
Y Output signal
t_R Room temperature
W_A Current setpoint

If the selected application requires an increased volumetric flow for heating, e.g. for:
- Providing or assisting heating with electric air heater.
- Improving the air quality during heating.

CR24-B2 configuration

The VAV function is configured using DIP switch 2.

CR24-B3 configuration

The VAV function is configured using DIP switch 2.

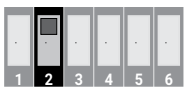

Electric air heater — CR24-B2E only

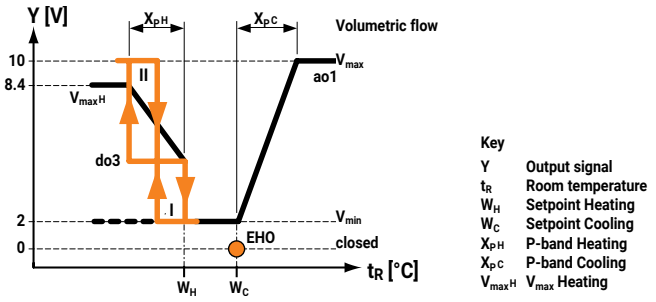

If the selected application requires an increased volumetric flow for heating, e.g. for:
- Provision without assisting heating with air.
- Improving the air quality during heating.

CR24-B2E configuration

This function is activated using DIP switch 2.

External temperature sensor — Analog input ai1 — CR24-B1, CR24-B2, CR24-B3

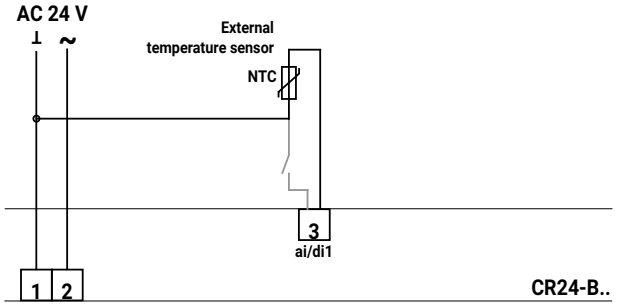

An external NTC temperature sensor can be connected to the analogue input ai1. Sensor type: NTC 5k (5 kΩ)

Typical application

A temperature sensor measures the average room temperature in the exhaust air duct.

Notes
- The controller automatically detects the presence of an external sensor.
- It is possible to install an energy hold off switch simultaneously at di1, in which case the system changeover to the internal sensor (see also "Energy hold off"). This permits the room temperature to be monitored in order to protect the building.

Supply air temperature limitation — Analog input ai1 — CR24-B2E only

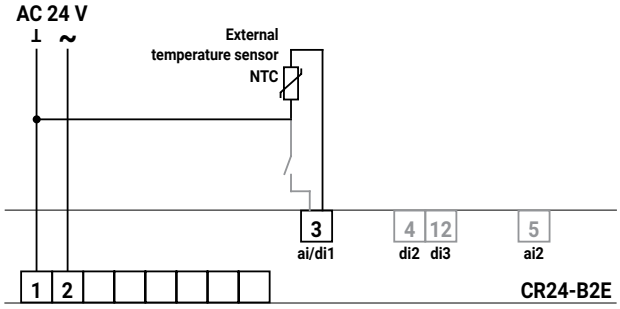

An external NTC temperature sensor can be connected to the analogue input ai1. Sensor type: NTC 5k (5 kΩ)
Function: The temperature of the supply air is limited by shedding individual load increments if the maximum temperature is exceeded. This results in an almost modulating control characteristic.
Benefit: Increased comfort and economical energy consumption

Notes
- The controller automatically detects the presence of a supply air temperature limitation sensor.
- Combined application with EHO switch:
  EHO active = supply air temperature limitation not active

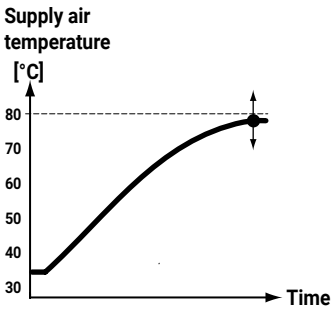

Without supply air limitation

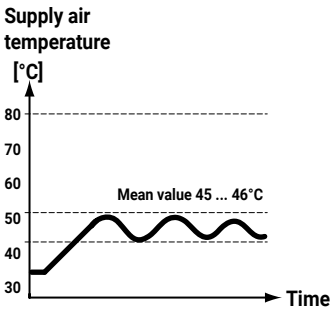

With supply air limitation

External setpoint shift

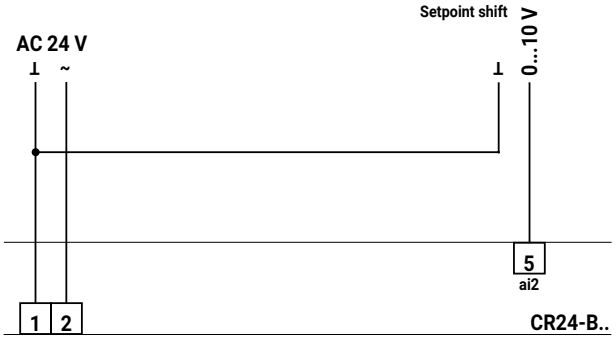

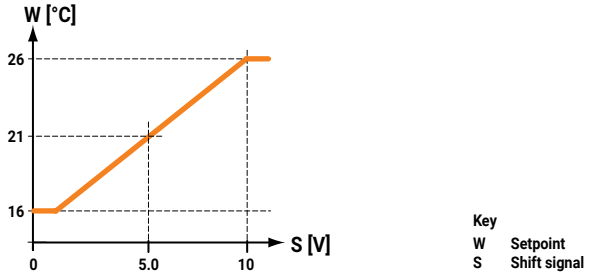

Analog input ai2 — all CR24-..

An external 0...10 V signal at the analogue input ai2 can be used to shift the basic setpoint by 0...10 K (corresponds to 0...10 V).

Typical application

- Summer/winter compensation

Notes

A negative shift can be achieved by adjusting the basic setpoint to the required final setpoint, e.g. from 21°C (default value) to 16°C. In this case:

- 0... 5 V corresponds to 16...21°C and
- 5...10 V corresponds to 21...26°C (see diagram opposite)

Air flush

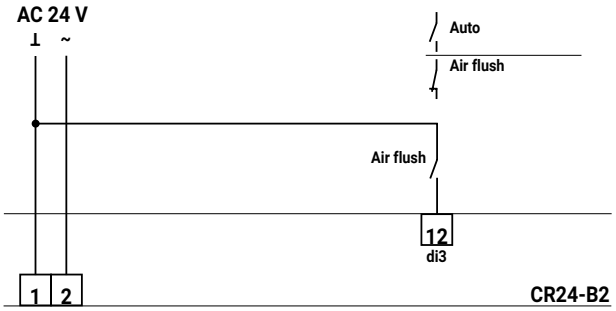

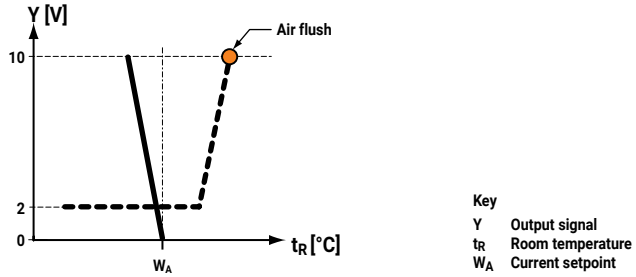

Digital input di3 — CR24-B2 only

The CR24-B2 controller allows override control at the digital input di3 to enable the room to be flushed with the maximum volumetric flow (Vmax).

Typical applications

- Purging conference rooms, hotel rooms etc. (e.g. time switch-controlled)
- Assisting smoke extraction
- Controlling air quality (2-point signal)

Notes

- The VAV output ao1 is set to a fixed value of V_{max} (10 V).
- The heating output ao3 remains in the normal control mode and continues to be controlled by means of the heating sequence.

Changeover ao1

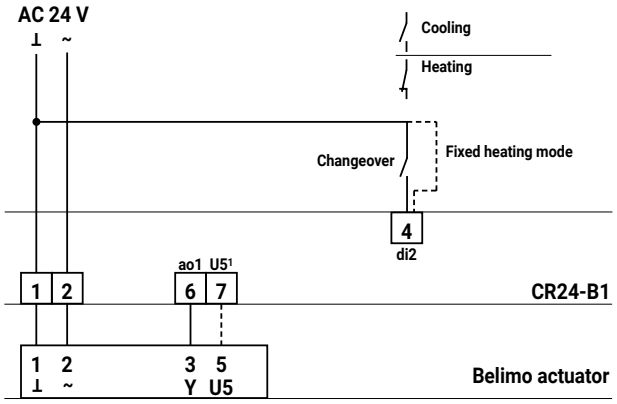

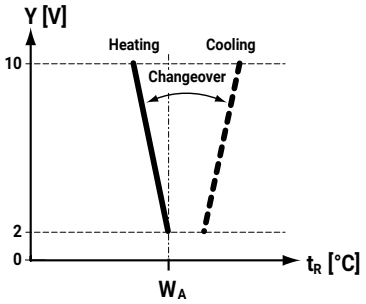

Key
Y Output signal
t_R Room temperature
W_A Current setpoint

Digital input di2 — CR24-B1 only

In changeover applications, the digital input di2 controls the VAV system output ao1 of the CR24-B1 controller.

Typical applications

Changeover heating or heating/cooling.

Note

The CR24-B3 controller is suitable for applications that require both a stand-by function and a changeover function.

Configuration

The changeover function is configured using DIP switch 2

Changeover ao2

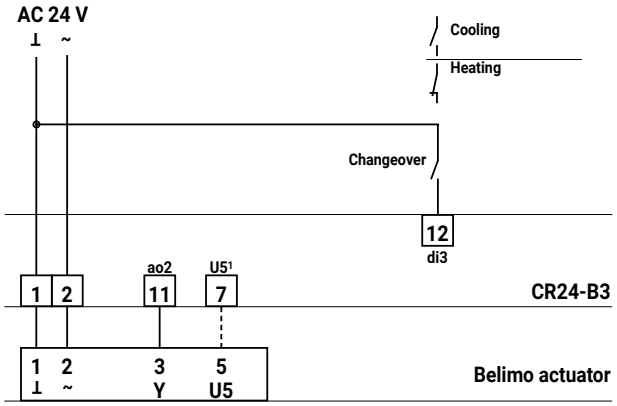

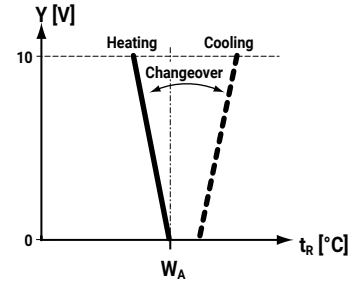

Key
Y Output signal
t_R Room temperature
W_A Current setpoint

Digital input di3 — CR24-B3 only

In changeover applications, the digital input di3 controls the common heating/cooling output ao2 of the CR24-B3 controller.

Typical applications

Changeover heating or heating/cooling.

Note

- For chilled ceiling applications, refer to page 23.
- The CR24-B1 controller is suitable for applications that only require a changeover function.

Configuration

The changeover function is configured using DIP switches 3 and 4.

Boost – V_{max}

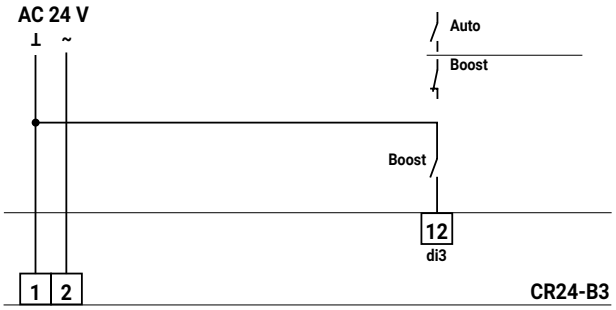

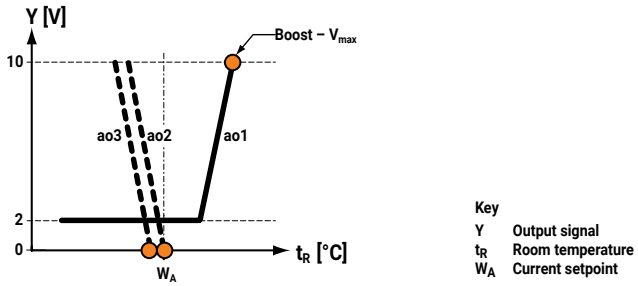

Digital input di3 — CR24-B3 only

The CR24-B3 controller allows override control at the digital input di3 to enable the room to be ventilated with the maximum volumetric flow (V_{max}). This function acts on all three analogue outputs (see "Notes"). Room temperature control is deactivated in this mode (exception: frost protection function).

Typical applications

- Purging conference rooms, hotel rooms etc.
- Assisting smoke extraction
- Free- or night cooling

Notes

The boost function acts on the outputs as follows:

- ao1 (VAV) 100% > 10 V (V_{max})
- ao2 (heating/cooling) 0% > 0 V
- ao3 (heating) 0% > closed (3-point)

The boost function is deactivated by the following events:

- Boost signal (di3) not active
- Frost limit temperature (10°C) undershot

Configuration

This boost function is configured using DIP switches 4 (boost on) and 5 (boost V_{max}).

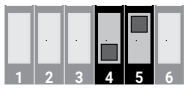

Boost – Temperature

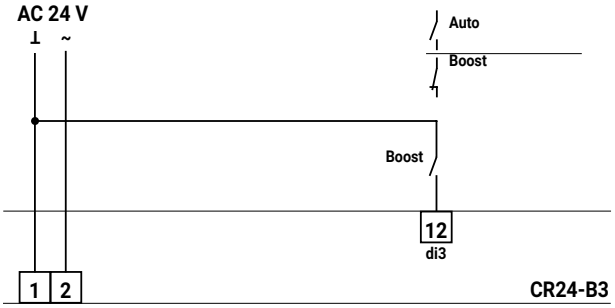

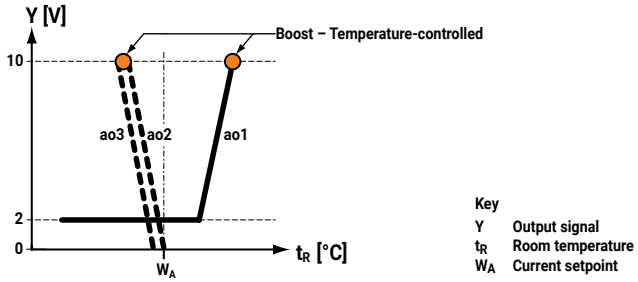

Digital input di3 — CR24-B3, CR24-B2E

The CR24-B3 and CR24-B2E controllers allow override control at the digital input di3 to enable the room to be heated or cooled with the maximum capacity. This function acts on all three analogue outputs (see "Notes").

Typical applications

- Rapid heating, rapid cooling
- Night cooling, morning boost etc.

Notes

The boost function is temperature-sensitive and acts on the outputs as follows

CR24-B3:

- ao1 (VAV) 100% > 10 V (V_{max})
- ao2 (heating/cooling) 100% > 10 V
- ao3 (heating) 100% > open (3-point)

CR24-B2E:

- ao1 (VAV) 100% > 10 V (V_{max})
- do3 / 1 ON
- do3 / 2 ON

To support electric air heater applications, the VAV system output (ao1) will be
activated at the heating condition too.

The boost function is deactivated by the following events:

- Boost signal (di3) not active
- Comfort setpoint (W) reached

The air is always conditioned to the comfort setpoint W, even if stand-by (d1) is active, in order to facilitate room preconditioning.

Configuration (CR24-B3 only)

This boost function is configured using DIP switches 4 (boost on) and 5 (boost temperature).

Chilled ceiling with dew point limiting

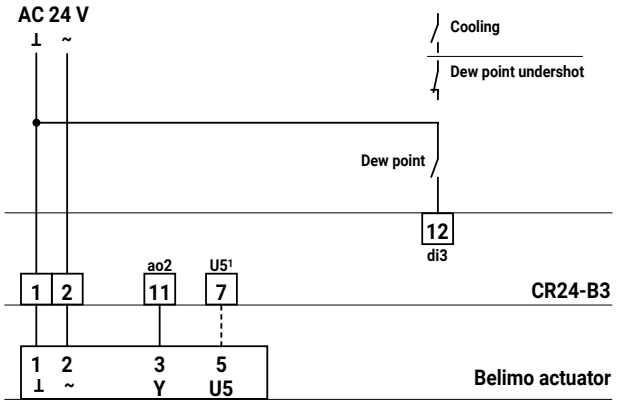

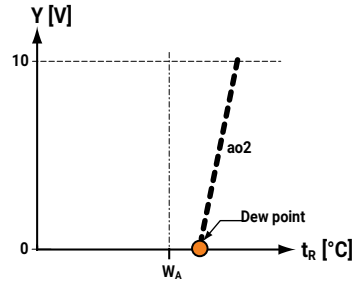

Key
Y Output signal
t_R Room temperature
W_A Current setpoint

Digital input di3 — CR24-B3 only

If the temperature at the external dew point monitor (input di3) falls below the dew point, output ao2 is set to 0 V.

Typical applications

Chilled ceiling systems that require dew point limiting.

Configuration

This function is configured using DIP switches 3 and 4.

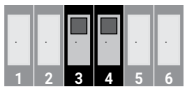

Chilled ceiling with dew point limiting and changeover

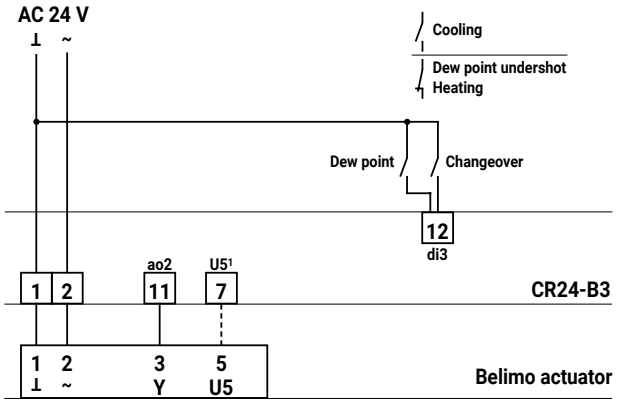

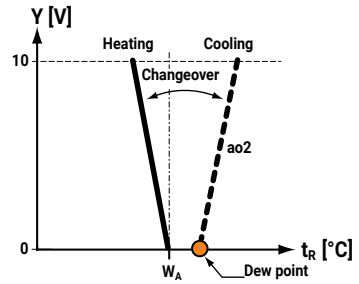

Key
Y Output signal
t_R Room temperature
W_A Current setpoint

Digital input di3 — CR24-B3 only

If the temperature at the external dew point monitor (input di3) falls below the dew point, output ao2 is set to 0 V. Dew point limiting can be combined with the changeover function.

Typical applications

Switchable heated/chilled ceiling systems that also require dew point limiting.

Configuration

This function is configured using DIP switches 3 and 4.

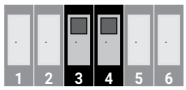

Rolling start — CR24-B2E only

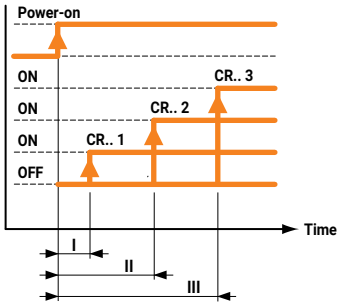

An ingenious startup function prevents overload situations when the power is switched on and stops fuses from being tripped if several air heaters are operated with the same voltage supply.

Power-on behaviour

- Power on
- Delay I Electric air heater of the first CR24-B2E enabled
- Delay II Electric air heater of the second CR24-B2E enabled
- Delay III Electric air heater of the third CR24-B2E enabled
- etc.

Excess temperature protection — CR24-B2E only

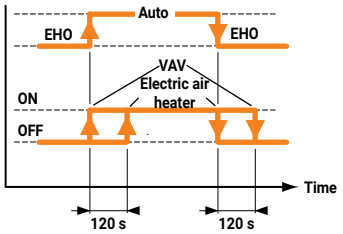

This function prevents the local safety interlock (STh) from responding unless absolutely necessary and relieves the load on devices and installations.
When the system is started up after a power on or EHO off, or when EHO active is switched off, the air heater output is switched on after a delay and the VAV output is switched off after a delay.

Step control — CR24-B2E only

Single steps

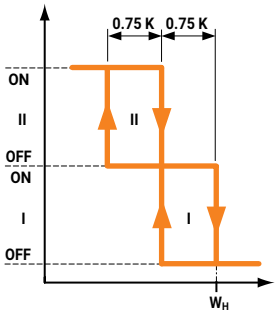

Binary steps

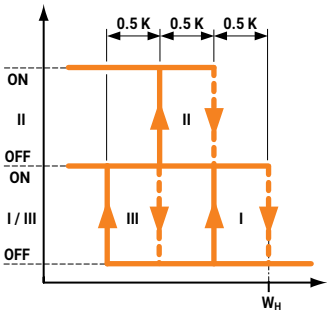

The B2E supports two electric air heater control modes:

- Single steps: Simple electric air heaters or open/close radiator/zone valves
- Binary steps: 2-step electric air heaters in 3-step mode, e.g. 1/3 – 2/3 – 3/3

CR24-B2E configuration

This function is configured using DIP switch 1.

- Single steps: Simple electric air heaters or open/close radiator/zone valves

(Factory setting)

- Binary step: 2-step electric air heaters in 3-step mode, e.g. 1/3 – 2/3 – 3/3

Dimensions [mm]

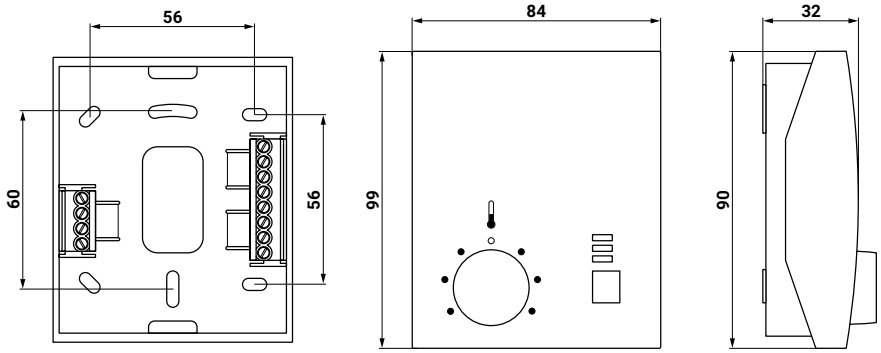

Mechanical installation

1. Remove the housing cover.
2. Slightly pull out the wall of the housing to release the pcb.
3. Remove the printed circuit board.

Rotary knob for setpoint adjustment

If the rotary knob has been removed, proceed as follows:

a. Insert the rotary knob approximately half way and turn it clockwise as far as the end stop.
b. Remove the knob and align it so that the cam is flush with the left end stop.
c. Insert the knob fully.

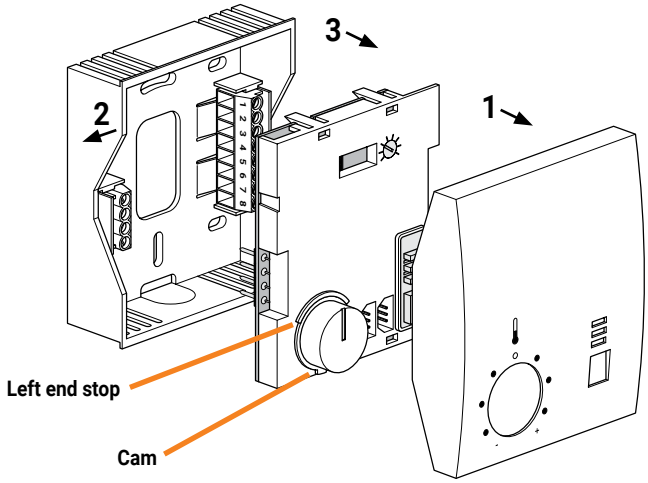

Electrical installation

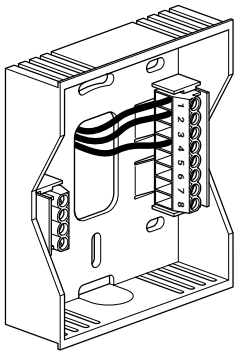

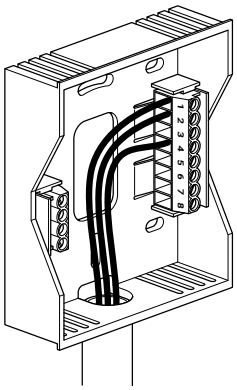

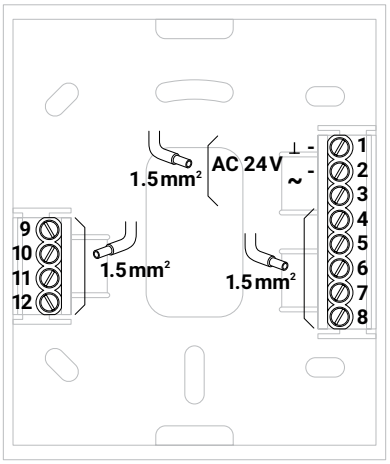

Power supply design / wire sizing

In addition to the actual wire sizing, attention must also be paid to the surrounding area and the cable routing. Signal cables must not be laid in the vicinity of load cables, objects liable to cause EMC interference etc. Paired or layer stranded cables improve immunity to interference.

24 V supply
Wire sizing and cabling

The wire sizing and installation of the AC 24 V supply, the fuse protection, and the cables are dependent on the total operated load and local regulations.
Account must be taken of the following performance data, including starting currents:
- Wire sizing values for room temperature controllers: 3 VA per CR24-..
- Wire sizing values for control devices, VAV controllers, damper actuators, valves etc. can be found in the latest data sheets and product information (www.belimo.com)
- Other devices to be operated with the AC 24 V supply
- Reserve capacity for subsequent expansion (if planned)

Digital input connections di1 / di2 / di3

The digital inputs of the CR24 controllers are connections with a low electrical load that can be controlled by a common switching contact if necessary.
Example: Common thermostat for changeover function.
The maximum cable length depends on the number of CR24 controllers and the cross section of the cable used or the maximum resistance of the cable and switching contact as well as the quality of the environment.

No. of CR24-..	Cable cross section	Cable length
10	0.75 mm²	max. 250 m
20	0.75 mm²	max. 200 m
20	1.00 mm²	max. 250 m
25	0.75 mm²	max. 170 m
25	1.00 mm²	max. 220 m
25	1.50 mm²	max. 250 m
30	0.75 mm²	max. 140 m
30	1.00 mm²	max. 190 m
30	1.50 mm²	max. 250 m
40	0.75 mm²	max. 100 m
40	1.0 mm²	max. 140 m
40	1.50 mm²	max. 210 m
50	0.75 mm²	max. 80 m
50	1.00 mm²	max. 110 m
50	1.50 mm²	max. 170 m

If the number of CR24-.. controllers exceeds that indicated in the table, the next higher number of CR24-.. controllers should be taken instead.
Example of a system with 13 CR24-B1 controllers and a common C/O contact:
Use the table data for 20 CR24.. controllers to design the cable:
20 x CR24-.. -> 0.75 mm² -> 200 m

Note
This table does not apply to the design of the AC 24 V power supply cable.
The supply cable is determined by the total power of all loads (see above).

Analogue input connection ai1

The analogue input ai1 is used to connect an external NTC 5 kΩ temperature sensor. The sensor value is 5969 Ω at 21°C. A change of 50 Ω corresponds to approximately 0.2 K in this range.
The sensor cable constitutes a series resistance that must be added to the actual sensor value. Assuming a cable length of 15 m (2 x 15 = 30 m), the resistance of one 0.75 mm² Cu cable is approximately 0.7 Ω, in other words negligible.
To prevent interference, however, the sensor cable should be a maximum of 20 m long.

Analogueg input connection ai2

The 0...10 V input (with the 10 kΩ pulldown resistor) can be used to connect an external 0...10 V signal for a setpoint shift.
The current is calculated according to Ohm's Law: I = U/R: 10 V/10 kΩ = 1 mA.
Calculation: Maximum permissible voltage drop across the cable (V) divided by the current (1 mA) = cable impedance in Ω.

Commissioning / Power-on behaviour

Commissioning

1. Assemble the baseplate of the housing and connect the cables (see page 25).
2. Configure the DIP switches on the printed circuit board according to the required application.
3. Assemble the printed circuit board on the baseplate of the housing and then mount the housing cover (see page 15).
4. Switch on the nominal voltage (AC 24 V).
5. Optional: start the test and simulation mode (see below).

When the voltage is applied, the system starts operating normally in AUTO mode (unless the test and simulation mode is selected). The active operating status is determined primarily by the configuration of the DIP switches and the status of the inputs.

Power-on behaviour

After power on of the voltage supply, the outputs, will be initialised as follows:
- ao1 = 0 V
- ao2 = 0 V
- ao3 = closed (200 s)

Subsequently, the controller switches automatically to the control mode.

Test and simulation mode

All controllers are supplied with two auxiliary programmes for commissioning and servicing:
- Internal function test
- Control sequence simulation

Activating test and simulation mode

The test and simulation mode of CR24-B.. controllers can be activated easily with the mode switch on the operating elements. With CR24-A.. controllers, the housing cover must be removed first.

To activate test mode

1. Set the mode switch to MAX
   - The red LED (MAX status indication) lights up
2. Keep the mode switch pressed for ten seconds
   - The internal function test is activated (see below)

To activate simulation mode

3. Press the mode switch again briefly (for approximately one second)
   - The green LED (AUTO status indication) flashes
   - Control sequence simulation is activated (see below)

Deactivating test and simulation mode

The test and simulation mode can be deactivated either by pressing the mode switch again for ten seconds or by interrupting the power supply. It is also deactivated automatically 15 minutes after the last user action (auto-reset).

Internal function test

The internal function test tests the nominal voltage that is connected to the controller (AC 24 V), in other words the complete electrical wiring system from the control cabinet to the controller.
The three LEDs (status indication) indicate the voltage level (see below) and states during the test.

Note
Case B and C do not need further attention. In case A (<20 V) attention must be paid to the following points:
- Quality of the wiring and connections
- Cable length/diameter and the transformer sizing.

Nominal voltage (AC 24 V)

LED (status indication)		Scenario A	Scenario B	Scenario C
MAX	red	flashing	flashing	permanently on
ECO	orange	flashing	flashing	permanently on
AUTO	green	permanently off	flashing	permanently on
		<20 V	20...22 V	>22 V

Control sequence simulation (CR24-B1, CR24-B2, CR24-B3)

CR24-B1, CR24-B2, CR24-B3

The connected actuators, and thus also the heating and cooling control sequences, can be simulated independently of the room temperature in simulation mode.
This permits the volumetric flow (V_{min} and V_{max}) to be tested in air systems or the maximum heating and cooling capacity in water systems.

Notes
- The external control signals (di1, di2 and di3) are suppressed while the simulation is active.
- Due to the system-related damping of the set-point potentiometer in the simulation mode, the potentiometer may only be adjusted slowly.
- A-types (controllers without operating elements): please reset the potentiometer to the 0-position after simulation.
- Simulation mode is automatically deactivated 15 minutes after the last user action (auto-reset).

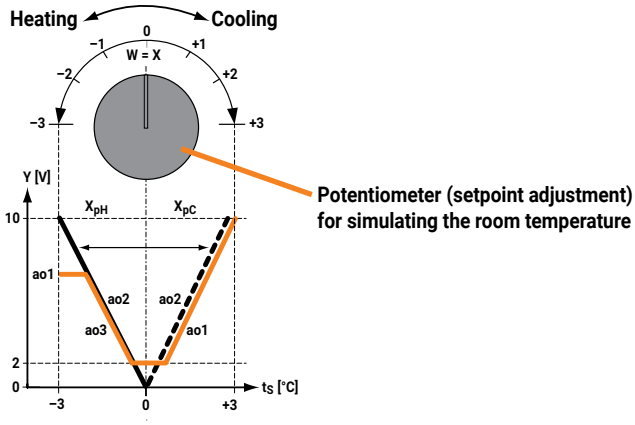

CR24-B2E

The simulation mode for the CR24-B2E is basically as described above.
Unlike water operated air heaters, electric air heaters are not allowed to be operated without a flow. Simulations can be carried out on the CR24-.. at any time, even if the ventilation system is not operating.
The two triac outputs are activated for a maximum of 15 seconds in simulation mode to prevent overheating due to operation without ventilation. To activate these outputs again, the potentiometer must be reset via the “0” position to the heating range.

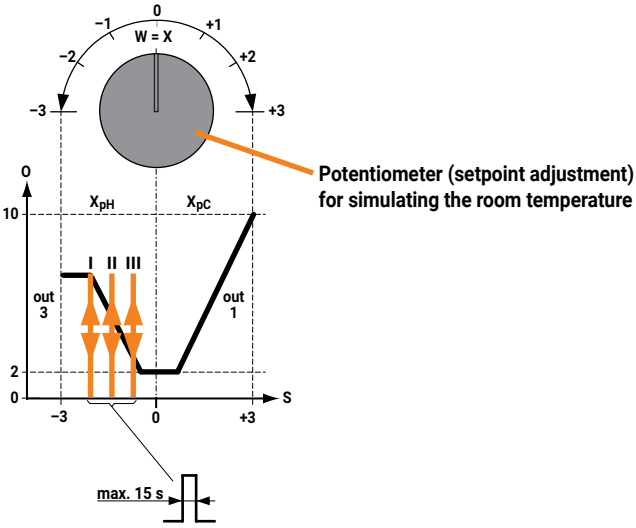

All inclusive.

Belimo as a global market leader develops innovative solutions for the controlling of heating, ventilation and air-conditioning systems. Damper actuators, control valves, sensors and meters represent our core business.

Always focusing on customer value, we deliver more than only products. We offer you the complete product range for the regulation and control of HVAC systems from a single source. At the same time, we rely on tested Swiss quality with a five-year warranty. Our worldwide representatives in over 80 countries guarantee short delivery times and comprehensive support through the entire product life. Belimo does indeed include everything.

The “small” Belimo devices have a big impact on comfort, energy efficiency, safety, installation and maintenance.

In short: Small devices, big impact.

- 5-year warranty
- On site around the globe
- Complete product range
- Tested quality
- Short delivery times
- Comprehensive support

BELIMO Automation AG
Brunnenbachstrasse 1, 8340 Hinwil, Schweiz
+41 43 843 61 11, info@belimo.ch, www.belimo.com

Product information S4-CR24-... • en • v2.3 • 02.2026 • Subject to changes