Temperature controller for heated/chilled ceiling systems

Table of contents

Overview of the system	2
Brief description, Accessories	3
Technical data sheet	
Technical data	5
Safety notes	5
Product features	6
Configuration	6
Electrical installation	6
Operation	7
Functions	
Introduction	9
Function overview	9
Setpoint determination	10
Pre-comfort	11
Energy hold off (EHO)	11
Chilled ceiling with dew point monitoring	12
External setpoint shift	12
External temperature sensor (ai1)	13
Analogue outputs	13
Dimensions, installation, commissioning, service	
Dimensions [mm]	15
Mechanical installation	15
Electrical installation	15
Design for supply / wire sizing	16
Commissioning / Power On response	16
Test and simulation mode	16
Internal Function test	17
Simulation control sequence	17

Overview of the system

Single room controller

CRK24-B1

Heated/chilled ceiling applications

6-way ball valve and rotary actuators

R3015-..-..-B2 / R3020-..-..-B2 + LR24A-MP / LR24A-SR / EP0..R-R6-SR / EP0..R-R6-BAC

Accessories

ZTH EU

Diagnostic and setting device

PC-Tool

Setting for MP / MFT(2) actuators

ZK1-VAV

Connection cable ZTH-VAV to CRK24, Diagnostic socket 1/2

Brief description

The room temperature controller CRK24-B1 is precisely designed for the regulation of heated/chilled ceilings. The output sequence of the controller is calibrated to the 6-way ball valves R3015-..-..-B2/R3020-..-..-B2 in combination with LR24A-MP/LR24A-SR actuator plus EP0..R-R6-SR and EP0..R-R6-BAC.

The multitude of override features makes possible an economically and energetically optimised system solution for individualised control of the room climate.

Device

Standard model CRK24-B1 with user interface (setpoint adjustment, mode switch and status display). For operation, see page 7.

Accessories

Mechanical accessories

Type	Description
CRZA-A	Spare cover without user interface
CRZW	Spare baseplate

Temperature controller for single-room applications with one analogue output:

- **The 6-way ball valve for the regulation of a heated/chilled ceiling can be connected with the analogue output ao1.**

Technical data

Electrical data	Nominal Voltage	AC 24 V 50/60 Hz
	Dimensioning	3 VA, without actuators
	Power supply range	AC 19.2 … 28.8 V
	Connections	Screw terminal max. 1.5 mm^2
Functional data	Control characteristics	P
	– P-band heating / cooling	Selectable: 2.0 K / 1.0 K or 4.0 K / 2.0 K
	External temperature sensor (ai1)	Type NTC, 5 kΩ, Power supply range 10 … 45°C e.g. Belimo Type TFK
	Setpoint	Adjustment range 15 … 36°C (Default 21°C)
	– Energy hold off (EHO)	Heating 15°C / Cooling 40°C
	– Pre-comfort	Heating –3 K / Cooling +3 K
	Dead band	1 K
	Frost protection limit	10°C
	Operation	
	– Mode switch and status display (LED)	AUTO (green) – ECO (orange) – MAX (red)
	– Rotary knob for setpoint adjustment	±3 K
	Communication connection for field devices	2 x PP (for PC-Tool, ZTH EU, etc.)
Inputs	2 x analogue, 2 x digital	
	– External temperature sensor (ai1)	Type NTC, 5 kΩ, Power supply range 10 … 45°C
	– External setpoint shift (ai2)	0 … 10 V correspond to: 0 … 10 K
	– Digital inputs (di1, di2,)	Contact rating 10 mA
Output	1x analogue	
	– 6-way ball valve (ao1)	(0) 2 … 10 V, max. 5 mA
Norms and Standards	Protection class	**III** Safety extra-low voltage
	Degree of protection	IP30 (EN 60529)
	Mode of operation	Type 1 (EN60730-1)
	Software class	A (EN 60730-1)
	EMC	CE according to 2004/108/EU
	Ambient conditions	
	– Operation	0 … +50°C / 20 … 90% r.h. (non-condensating)
	– Transport and storage	25 … +70°C / 20 … 90% r.h. (non-condensating)
Dimensions / Weight	Dimensions (H x W x D)	99 x 84 x 32 mm
	Weight	105 g
Housing colour	Baseplate	NCS2005-R80B light grey (corresponds approximately to RAL 7035)
	Cover	RAL9003 signal white

Safety notes

- **The controller is not allowed to be used outside the specified field of application, especially in aircraft or in any other airborne means of transport.**
- **It may only be installed by suitably trained personnel. Any legal regulations or regulations issued by government agency authorities must be observed during assembly.**
- **The device does not contain any parts that can be replaced or repaired by the user.**
- **The device contains electrical and electronic components and is not allowed to be disposed of as household refuse. All locally valid regulations and requirements must be observed.**

Product features

Energy hold off (EHO) In energy saving mode, the room temperature is regulated to the building protection level, i.e. the heating setpoint is significantly reduced or the cooling setpoint is significantly increased, for instance in a room with an open window.

Pre-comfort The room temperature is reduced to stand-by level, i.e. the heating setpoint is slightly reduced and/or the cooling setpoint is slightly increased, for instance in a room that is temporarily unoccupied.

Frost If the current room temperature falls below 10°C, then the frost function will be activated.

Dew point limitation If the optional connectable dew point limiter responds, then the valve is moved into neutral position.

External temperature sensor An external temperature sensor can be connected at analogue input ai1.

External setpoint shift An external DC 0 ... 10 V signal at the analogue input ai2 can be used to shift the basic setpoint by 0 ... 10 K, e.g. for summer/winter compensation.

The functions are described in detail on pages 9 to 13.

Configuration

Configuration

DIP	Default settings	
1	P-Band normal	P-Band wide
2	Output ao1 modulating	Output ao1 On/Off

ao1 modulating

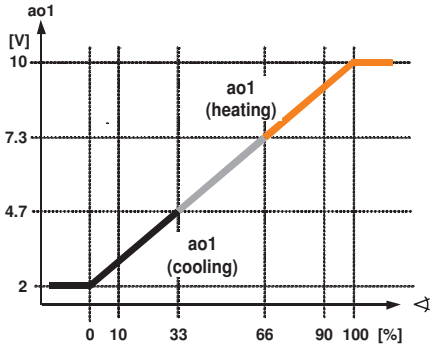

ao1 On/Off

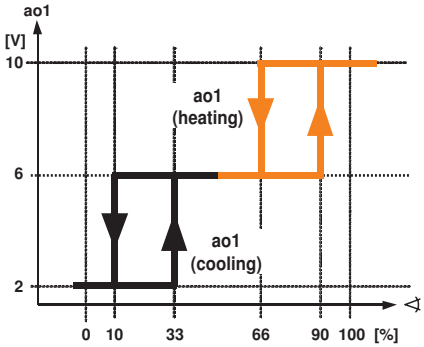

Electrical installation

Wiring diagram

Notes
- Connect via safety isolation transformer.
- Parallel connection of other actuators possible. Note the performance data.

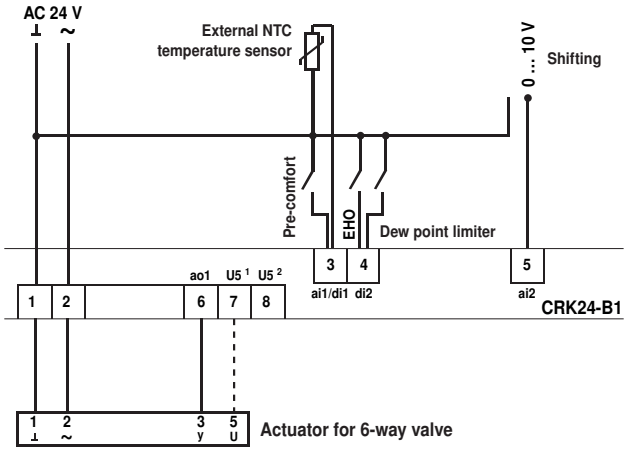

Inputs			Outputs		
3	ai1	External temperature sensor	6	ao1	System output for 6-way valve
	di1	Pre-comfort	**Other connections**		
4	di2	Energy hold off / dew point	7	PP1	Diagnostic socket 1
5	ai2	External setpoint shift			

Operating level 1 – Operation

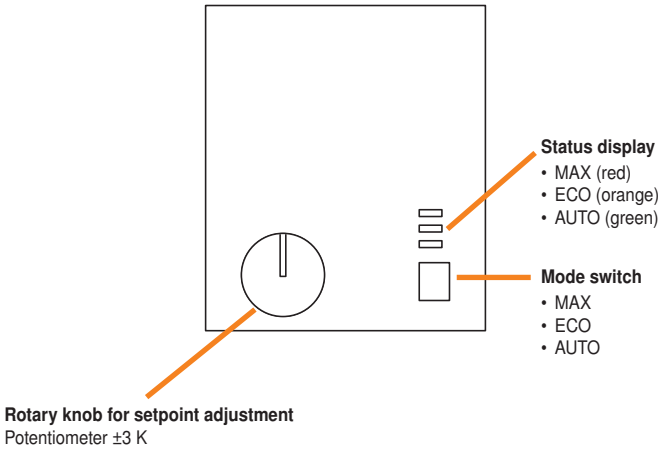

Operating mode / Setpoint

Mode switch and status display

Selection can be made between three operating modes:

- **AUTO – optimum comfort mode**
  The room will be kept at comfort zone status insofar as the external control signals permit this. All control functions are enabled.
- **ECO – optimum energy mode**
  The room will be kept at pre-comfort status insofar as the external control signals permit this. Reduced heating (–3 K) and elevated cooling setpoints (+3 K) are in effect in this status. Starting from this status, the room can be returned to comfort status within a short time. Sequence control is enabled. The operating mode ECO is intended for rooms not continuously occupied and/or for reduced requirements.
- **MAX – Boost function**
  The room will be heated or cooled at maximum power, insofar as the external control signals permit this.
  The Boost function is switched off:
  – Timer off
  – Setpoint is reached
  – Selection of a different mode (AUTO or ECO)

Operating level 2 – Configuration

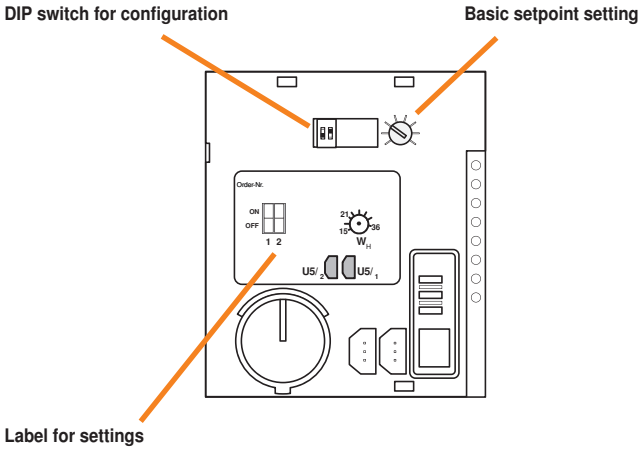

Application / Parameters

DIP switch for configuration

DIP switches 1 and 2

Basic setpoint setting W_H (heating setpoint)

Potentiometer 15 … 36 °C (Default 21 °C)

Label for settings

Recording the settings used
(DIP switch and basic setpoint)

Operating level 3 – Service

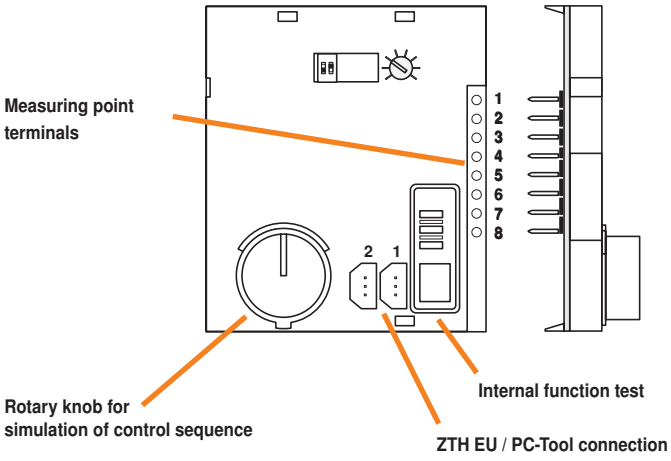

Test / Simulation

Measuring point terminals

Measuring points for all connection terminals (also during operation).

Internal function test

A comprehensive internal function test can be started with the mode switch which makes it possible to check the controller, including nominal voltage (AC 24V). The three LEDs (status display) are used thereby to display the voltage level and the statuses.

Simulation control sequence

The rotary knob for the setpoint adjustment can be used to simulate the connected actuators, and thus the heating and cooling control sequences, independent of the room temperature.

ZTH EU / PC-Tool connection

The diagnostic socket 1 is used for PP communications with the connected Belimo MFT actuator. Physical access to the valve actuator can be dispensed with as a result.

Introduction

The control functions of the CRK24-B1 define the behaviour of the controller output or influence the current setpoint, respectively.
Operation can be automated and comfort and energy savings potential enhanced through the utilisation of corresponding sensor mechanisms at the input side.
The corresponding functions are described in detail in the following.

Function overview CRK24-B1

Supply	AC 24 V / 50/60 Hz
Application	– Room temperature controller in the comfort zone – Internal temperature sensor (Type NTC, Power supply range 10 … 45°C) – Setpoint (adjustment range 15 ... 36°C)
Operation	– Mode selection switch: AUTO – ECO – MAX – Mode display LED: AUTO – ECO – MAX – Setpoint adjustment rotary knob ±3 K
Inputs	– Pre-comfort – Dew point limitation – Energy hold off (EHO) – External temperature sensor (Type NTC 5 kΩ, Power supply range 10 … 45°C) – External setpoint shift 0 … 10 V
Output	– 2 … 10 V System output: Belimo 6-way ball valve
Functions	– Control characteristics: P – P-Band, switchable – Output can be switched (modulating / On/Off) – Room temperature monitoring (frost) – Internal Function test with nominal voltage check – Commissioning mode with simulation of output and sequence – Diagnostics via integrated PC-Tool connection
Installation	Surface mounting with flush-mounted or surface-mounted connection

Application documentation

Continually expanded, comprehensive documentation with specific applications is available for the CRK24-B1 controller.

Setpoint calculation

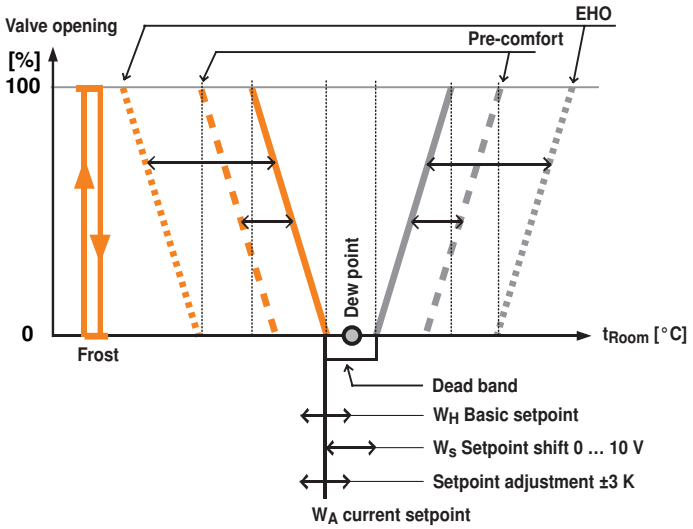

Operating status	Heating setpoint	Cooling setpoint
Comfort	Basic setpoint W_H ±3 K setpoint adjustment + Setpoint shift 0 … 10 V	Comfort-Heating setpoint W_A +1 K dead band
Pre-comfort	Comfort-Heating setpoint W_A – 3 K Pre-comfort-Offset heating	Comfort-Heating setpoint W_A +1 K dead band +3 K Pre-comfort-Offset cooling
Energy hold off	fix 15°C (building protection)	fix 40°C (building protection)
Frost	fix 10°C	without function

Examples

Comfort

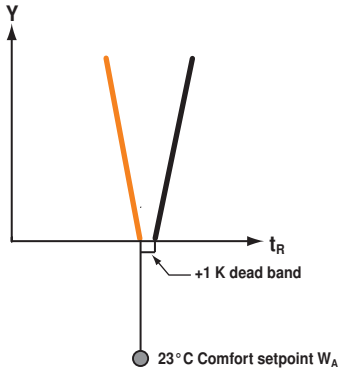

Pre-comfort

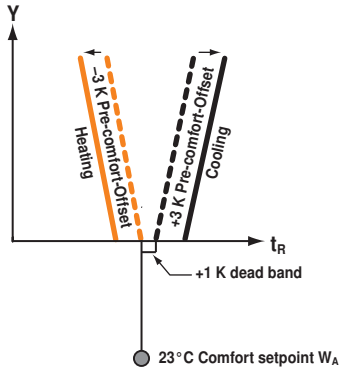

Pre-comfort

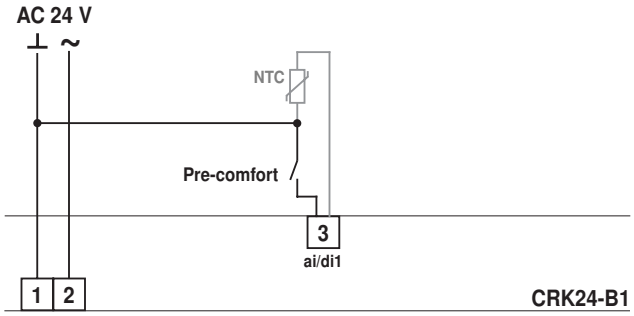

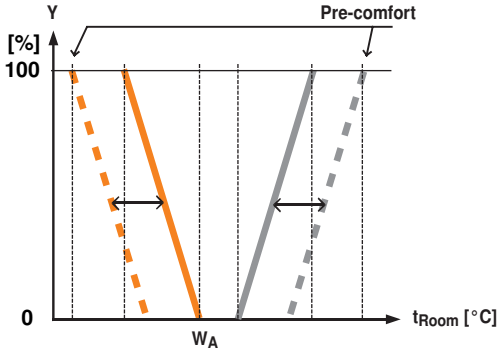

Digital input di1

If a local detector (e.g. a motion detector) has an effect on the digital input di1 and closes the corresponding contact, then the room will be regulated to stand-by level, i.e. the heating setpoint is reduced by 3 K or the cooling setpoint is raised by 3K, respectively.

Typical applications

- One motion detector, light switch or other detector at di1 reduces the energy consumption in unoccupied rooms.
- Superordinate imperative command, e.g. GLT.

Notes

- The frost limit is monitored with the internal sensor during Pre-comfort when an external temperature sensor is used.
- As a result of the automatic sensor recognition feature, the switch-over to Pre-comfort takes approximately 40 seconds.

Legend	
Y	Output signal
W_A	Current setpoint

Energy Hold Off (EHO)

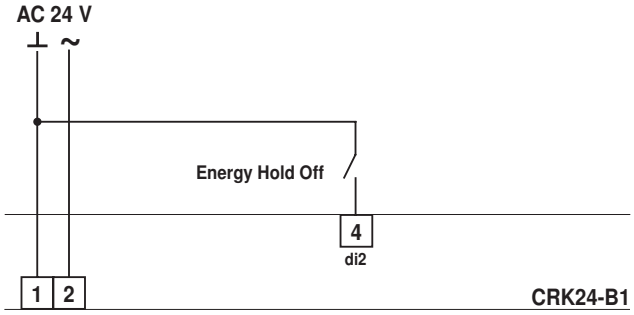

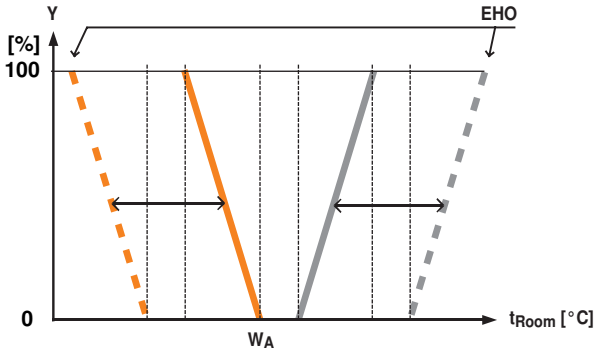

Digital input di2

If a local detector (e.g. a window switch) has an effect on the digital input di2 and closes the corresponding contact, then the room will be regulated in energy-savings mode to the building protection level, i.e. the heating setpoint is significantly reduced (15°C) and/or the cooling setpoint is significantly raised (40°C), so that sensitive furnishings (plants, pictures, etc.) will not be able to suffer any damage.

Typical applications

- One window switch at di2 stops energy consumption as soon as the window is opened until the lower or upper building protection limit has been reached.
- Superordinate imperative command, e.g. GLT.

Notes

- The 6-way valve is moved into neutral position during the Energy Hold Off (ao1 = 6 V).
- The mode switch (operating level 1) is deactivated during the Energy Hold Off (the input di2 has higher priority).

Legend	
Y	Output signal
W_A	Current setpoint

Chilled ceiling with dew point limiter

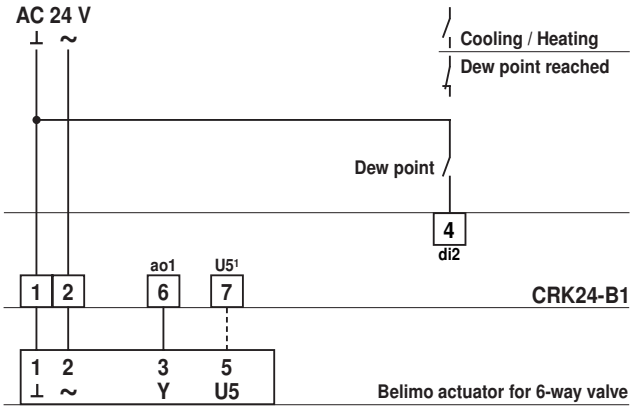

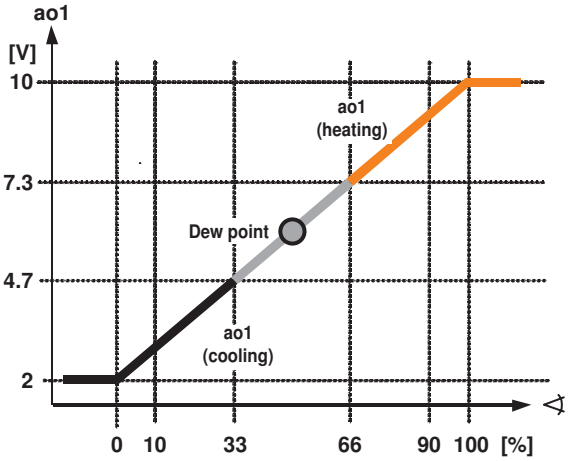

Digital input di2

If the optional connectable dew point limiter responds, then the output ao1 is overridden to 6 V by means of the input di2 (external dew point limiter). The 6-way ball valve moves into neutral position.

Typical applications

Chilled ceiling systems in which one dew point limit is required.

External setpoint shift

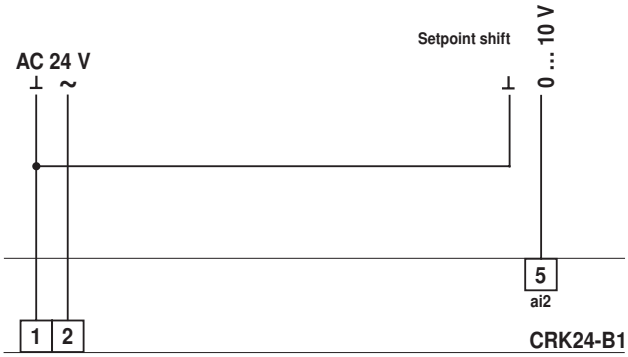

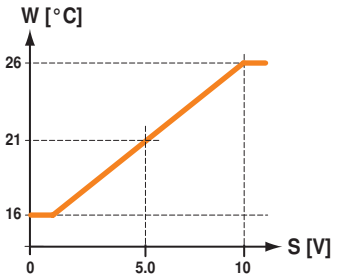

Legend	
W	Setpoint
S	Shift signal

Analogue input ai2

An external DC 0...10 V signal at the analogue input ai2 can be used to raise the basic setpoint by 0 ... 10 K (corresponding to 0 … 10 V).

Typical application

Summer/Winter Compensation

Notes

A negative shift is possible by setting the basic setpoint to the desired final setpoint, e.g. from 21°C (default value) to 16°C. This results in the following correspondences:
– 0 … 5 V: 16 … 21°C and
– 5 … 10 V: 21 … 26°C (see illustration at the left).

External temperature sensor (ai1)

An external NTC temperature sensor can be connected at analogue input ai1. Sensor type: NTC 5k (5 kΩ), e.g. Belimo TFK.

Typical applications

- More flexible placement of the sensor for recording the room temperature
- Temperature measurement in the ventilation channel for recording the average room temperature.

Notes

- The controller recognises it automatically if an external sensor is connected. No additional adjustments are required.
- The simultaneous utilisation of Pre-comfort at di1 is possible, although in this case a switchover to the internal sensor is made (see also «Pre-comfort»). As a result, the current room temperature is monitored for building protection.

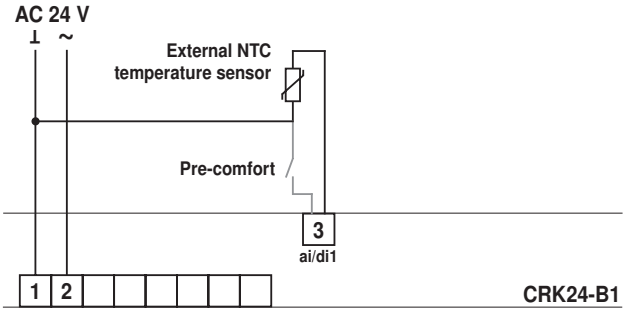

Analogue outputs

LR24A-MP Actuator for 6-way ball valve

- System output «ao1» (Terminal 6). diagnostic socket «U5/1» (Terminal 7).

Note

When using an LR24A-MP, it is expedient to direct the communications signal U5 of the actuator to the controller. Interventions can be implemented on the actuator by means of controller diagnostic socket 1 without the need for direct physical access.

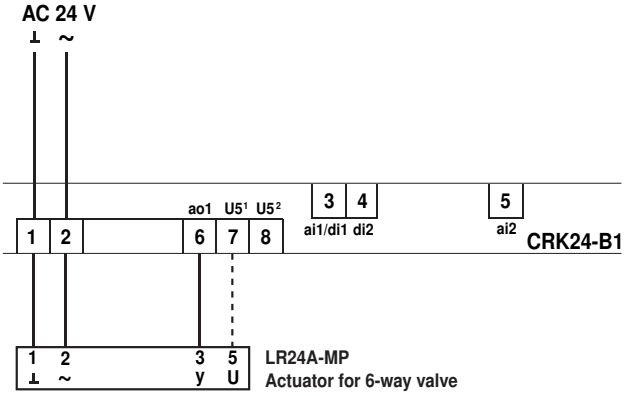

Dimensions [mm]

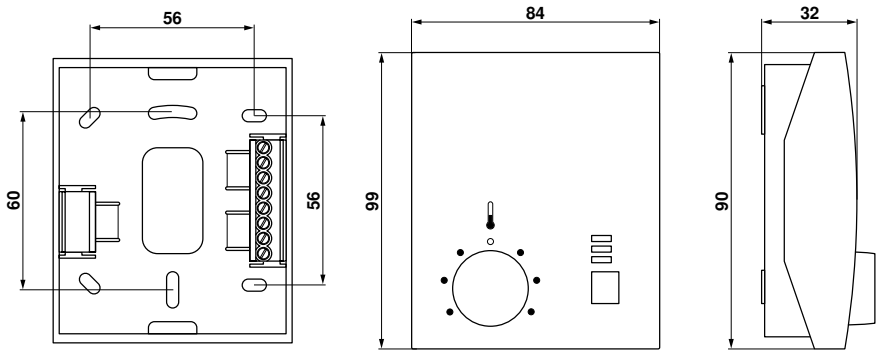

Mechanical installation

1. Remove the housing cover.
2. Pull out slightly the wall of the housing to release the pcb.
3. Remove the PCB.

Rotary knob for setpoint adjustment

If the rotary knob has been removed proceed as follows:

a. Insert the rotary knob approximately half way and turn it clockwise as far as the stop.
b. Remove the knob and align it so that the cam is flush with the left stop (see left).
c. Insert the knob fully.

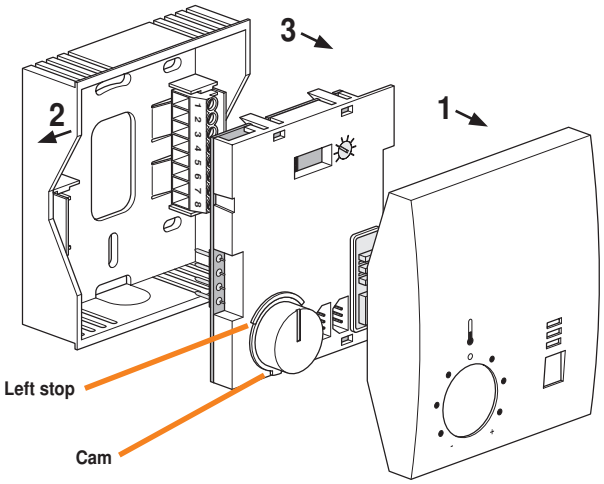

Electrical installation

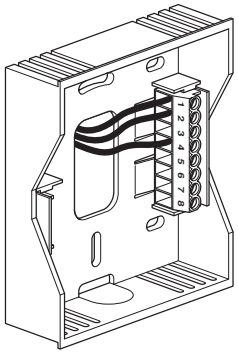

Flush-mounted connection

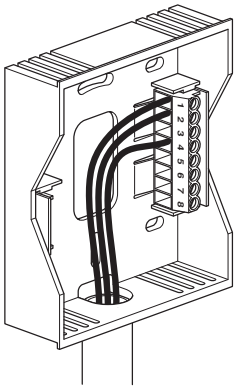

Surface-mounted connection

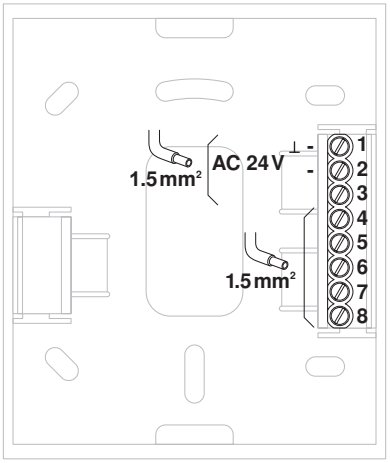

Terminal connection 1 … 8

Power supply design / wire sizing

In addition to the actual wire sizing, attention must also be paid to the surrounding area and the cable routing. Signal cables must not be laid in the vicinity of load cables, objects liable to cause EMC interference. etc. Paired or layer stranded cables improve immunity to interference.

24 V supply
Wire sizing and cabling

The wire sizing and installation of the AC 24 V supply, the fuse protection, and the cables are dependent on the total operated load and local regulations.
Account must be taken of the following performance data, including starting currents:
– Wire sizing values for room temperature controllers: 3 VA per CRK24-B1
– Wire sizing values for the valve actuators can be obtained from current data sheets and product information (www.belimo.eu)
– Other devices to be operated with the AC 24 V supply
– Reserve capacity for subsequent expansion (if planned)

Analogue input connection ai1

The analogue input ai1 is used to connect an external NTC 5 kΩ temperature sensor. The sensor value is 5969 Ω at 21 °C. A change of 50 Ω corresponds to approximately 0.2 K in this range.
The sensor cable constitutes a series resistance that must be added to the actual sensor value. Assuming a cable length of 15 m (2 x 15 = 30 m), the resistance of one 0.75 mm^2 Cu cable is approximately 0.7 Ω, in other words negligible.
To prevent interference, however, the sensor cable should be a maximum of 20 m long.

Commissioning / Power on behaviour

Commissioning

1. Assemble the baseplate of the housing and connect the cables (see page 15)
2. Configure the DIP switches on the printed circuit board according to the required application.
3. Assemble the printed circuit board on the baseplate of the housing and then mount the housing cover (see page 15)
4. Switch on the nominal voltage AC 24 V
5. Optional: start the test and simulation mode (see below)

When the voltage is applied, the system starts operating normally in AUTO mode unless the test simulation mode is selected. The active operating status is determined primarily by the configuration of the DIP switches and the status of the inputs.

Power on behaviour

After power on of the voltage supply the output gets initialised as follows:

– ao1 = 0 V

Subsequently the controller switches automatically to the control mode.

Test and simulation mode

All controllers are supplied with two auxiliary programs for commissioning and servicing:

– Internal function test
– Control sequence simulation

Activating test and simulation mode

The test and simulation mode of CRK24-B1 controllers can be activated easily with the mode switch on the operator panel.

To activate test mode

1. Set the mode switch to MAX
   – The red LED (MAX status indication) lights up
2. Keep the mode switch pressed for ten seconds
   – The internal function test is activated (see below)

To activate simulation mode

3. Press the mode switch again briefly for approx. one second
   – The green LED (COMF status indication) flashes
   – Control sequence simulation is activated (see below)

Deactivating test and simulation mode

The test and simulation mode can be deactivated either by pressing the mode switch again for ten seconds or by interrupting the power supply. It is also deactivated automatically 15 minutes after the last user action (auto-reset).

Internal function test

The internal function test tests the nominal voltage that is connected to the controller (AC 24 V), in other words the complete electrical wiring system from the control cabinet to the controller.. The three LEDs (status indication) indicate the voltage level (see below) and states during the test.

Note
Case B and C do not need further attention. In case A (<20 V) attention must be paid to the following points:
– Quality of the wiring and connections
– Cable length and diameter and the transformer sizing

Nominal voltage (AC 24 V)

LED (status indication)		Scenario A	Scenario B	Scenario C
MAX	red	**flash**	**flash**	**permanently on**
ECO	orange	**flash**	**flash**	**permanently on**
AUTO	green	**permanently off**	**flash**	**permanently on**
		<20 V	**20 … 22 V**	**>22 V**

Control sequence simulation

CRK24-B1

In the simulation mode, the connected actuator can be operated regardless of the room temperature. This permits the function of the system to be checked.

Notes
– The external control signals (di1 and di2) are suppressed during the simulation.
– The potentiometer may be adjusted only slowly, due to the system-dependent attenuation of the setpoint potentiometer in simulation mode.
– Simulation mode is automatically deactivated 15 minutes after the last user action (auto-reset).

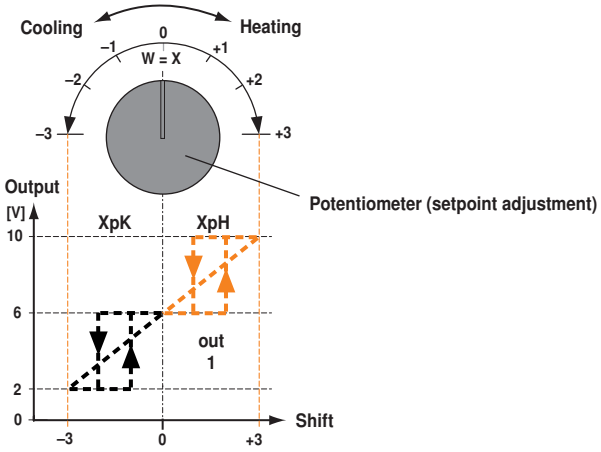

All-inclusive.

Switzerland

BELIMO Automation AG
Sales Switzerland
Brunnenbachstrasse 1
CH-8340 Hinwil
Tel. +41 (0)43 843 62 12
Fax +41 (0)43 843 62 66
verkch@belimo.ch
www.belimo.ch

Benelux

BELIMO Servomotoren BV
BENELUX
Postbus 300, NL-8160 AH Epe
Radeweg 25, NL-8171 MD
Vaassen
Tel. +31 (0)578 57 68 36
Fax +31 (0)578 57 69 15
info@belimo.nl
www.belimo.nl

Germany

BELIMO Stellantriebe
Vertriebs GmbH
Welfenstrasse 27
D-70599 Stuttgart
Tel. +49 (0)711 1 67 83-0
Fax +49 (0)711 1 67 83-73
info@belimo.de
www.belimo.de

At no charge

Orders:
Tel. **0711 1 67 83-83**

Technical Consultation:
Tel. **0711 1 67 83-84**

Fax 071**1 1 67 83-73**

Personal consultation with Regional Sales Director in:

Berlin, Hanover, Düsseldorf
Leipzig, Frankfurt, Munich
Hamburg, Stuttgart

Austria

BELIMO Automation
Handelsgesellschaft m.b.H.
Geiselbergstrasse 26-32
A-1110 Vienna, Austria
Tel. +43 (0)1 749 03 61-0
Fax +43 (0)1 749 03 61-99
info@belimo.at
www.belimo.at

Austria West

Tel. +43 (0)644 14 26 365
Fax +43 (0)732 70 10 51
dietmar.niederhametner@belimo.at

Hungary

Tel. +36 (06)20/920 46 16
Fax +36 (06)23/37 77 30
gabor.koeves@belimo.at

Slovakia

Tel. +43 (0)1 749 03 61-0
Fax +43 (0)1 749 03 61-99
info@belimo.at

Slovenia/Croatia/Bosnia

Tel. +386-(0)41-75 89 63
Fax +386-(0)4-2342-761
samo.smid@belimo.at

Serbia/Montenegro/
Macedonia/Bosnia

Tel./Fax +381-(0)11 311-9127
branimir.petrovic@belimo.at

Belimo worldwide: www.belimo.com

BELIMO®