Modulating globe valve actuator for 2-way and 3-way globe valves

- Actuating force 2500 N
- Nominal voltage AC/DC 24 V
- Control modulating 2...10 V
- Stroke 40 mm

Picture may differ from product

Technical data

Electrical data	Nominal voltage	AC/DC 24 V
	Nominal voltage frequency	50/60 Hz
	Nominal voltage range	AC 19.2...28.8 V / DC 21.6...28.8 V
	Power consumption in operation	4 W
	Power consumption in rest position	1.5 W
	Power consumption for wire sizing	6 VA
	Connection supply / control	Terminals with cable 1 m, 4x 0.75 mm^2 (Terminal 4 mm^2)
	Parallel operation	Yes (note the performance data)
Functional data	Actuating force motor	2500 N
	Operating range Y	2...10 V
	Input impedance	100 kΩ
	Position feedback U	2...10 V
	Position feedback U note	Max. 0.5 mA
	Position accuracy	±5%
	Manual override	with push-button, can be locked
	Stroke	40 mm
	Running time motor	150 s / 40 mm
	Sound power level, motor	55 dB(A)
	Adaptation setting range	manual (automatic on first power-up)
	Position indication	Mechanical, 5...40 mm stroke
Safety data	Protection class IEC/EN	III, Safety Extra-Low Voltage (SELV)
	Power source UL	Class 2 Supply
	Degree of protection IEC/EN	IP54
	Degree of protection NEMA/UL	NEMA 2
	Housing	UL Enclosure Type 2
	EMC	CE according to 2014/30/EU
	Certification IEC/EN	IEC/EN 60730-1 and IEC/EN 60730-2-14
	UL Approval	cULus according to UL60730-1A, UL60730-2-14 and CAN/CSA E60730-1 The UL marking on the actuator depends on the production site, the device is UL-compliant in any case
	Type of action	Type 1
	Rated impulse voltage supply / control	0.8 kV

Technical data

Safety data	Pollution degree	3
	Ambient humidity	Max. 95% RH, non-condensing
	Ambient temperature	0...50°C [32...122°F]
	Storage temperature	-40...80°C [-40...176°F]
	Servicing	maintenance-free
Weight	Weight	3.6 kg

Safety notes

- This device has been designed for use in stationary heating, ventilation and air-conditioning systems and must not be used outside the specified field of application, especially in aircraft or in any other airborne means of transport.
- Outdoor application: only possible in case that no (sea) water, snow, ice, insolation or aggressive gases interfere directly with the device and that it is ensured that the ambient conditions remain within the thresholds according to the data sheet at any time.
- Only authorised specialists may carry out installation. All applicable legal or institutional installation regulations must be complied with during installation.
- The switch for changing the direction of motion and so the closing point may be adjusted only by authorised specialists. The direction of motion is critical, particularly in connection with frost protection circuits.
- The device may only be opened at the manufacturer's site. It does not contain any parts that can be replaced or repaired by the user.
- The device contains electrical and electronic components and must not be disposed of as household refuse. All locally valid regulations and requirements must be observed.

Product features

Operating mode

The actuator is controlled with a control signal Y (note the operating range) and drives to the position defined by the control signal. The measuring voltage U serves for the electrical display of the actuator position 0...100% and as control signal for other actuators.

Simple direct mounting

Simple direct mounting on the globe valve by means of form-fit hollow clamping jaws. The actuator can be rotated by 360° on the valve neck.

Manual override

Manual override with push-button possible (the gear train is disengaged for as long as the button is pressed or remains locked).

The stroke can be adjusted by using a hexagon socket screw key (5 mm), which is inserted into the top of the actuator. The stem extends when the key is rotated clockwise.

High functional reliability

The actuator is overload protected, requires no limit switches and automatically stops when the end stop is reached.

Position indication

The stroke is indicated mechanically on the bracket with tabs. The stroke range adjusts itself automatically during operation.

Home position

Factory setting: Actuator stem is retracted.

When valve-actuator combinations are shipped, the direction of motion is set in accordance with the closing point of the valve.

The first time the supply voltage is switched on, i.e. at the time of commissioning, the actuator carries out an adaptation, which is when the operating range and position feedback adjust themselves to the mechanical setting range.

The actuator then moves into the position defined by the control signal.

Adaptation and synchronisation

An adaptation can be triggered manually by pressing the "Adaptation" button. Both mechanical end stops are detected during the adaptation (entire setting range).

The actuator then moves into the position defined by the control signal.

Product features

Setting direction of motion When actuated, the direction-of-stroke switch changes the direction of motion in normal operation.

Accessories

Electrical accessories

Description	Type
Auxiliary switch 2x SPDT add-on	S2A-H

Electrical installation

Supply from isolating transformer.
Parallel connection of other actuators possible. Observe the performance data.
Direction of stroke switch factory setting: Actuator stem retracted (▲).

Wire colours:
1 = black
2 = red
3 = white
5 = orange

AC/DC 24 V, modulating

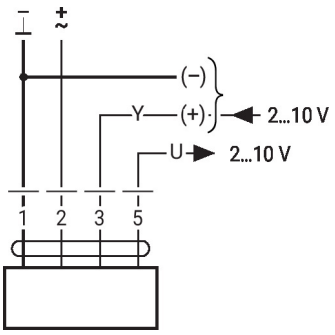

Override control (frost protection circuit)

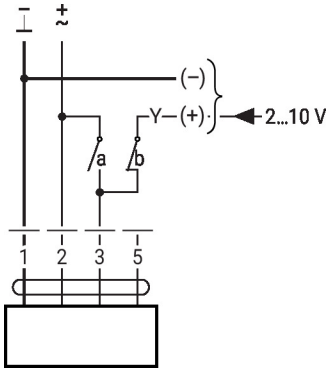

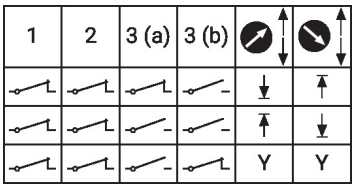

Operating controls and indicators

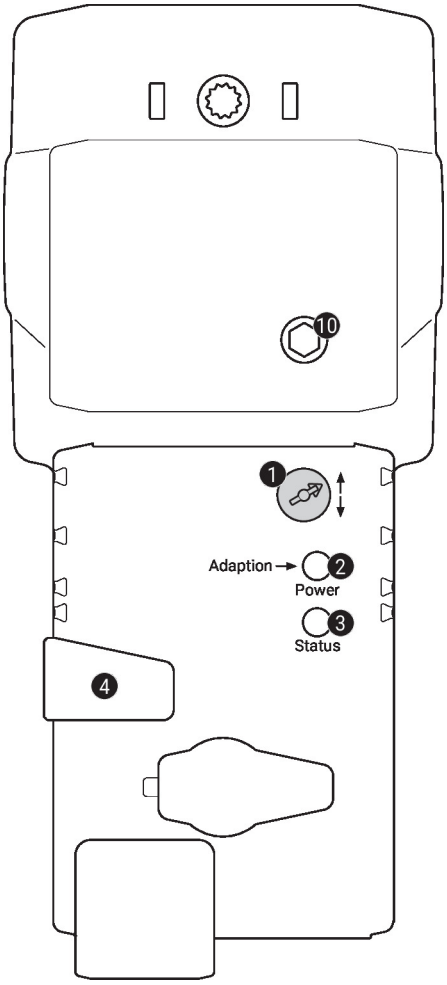

1 Direction of stroke switch

Switch over:	Direction of stroke changes

2 Push-button and LED display green

Off:	No power supply or malfunction
On:	In operation
Press button:	Triggers stroke adaptation, followed by standard mode

3 Push-button and LED display yellow

Off:	Standard mode
On:	Adaptation or synchronisation process active
Press button:	No function

4 Manual override button

Press button:	Gear train disengages, motor stops, manual override possible
Release button:	Gear train engages, standard mode

10 Manual override

Clockwise:	Actuator stem extends
Counterclockwise:	Actuator stem retracts

Dimensions

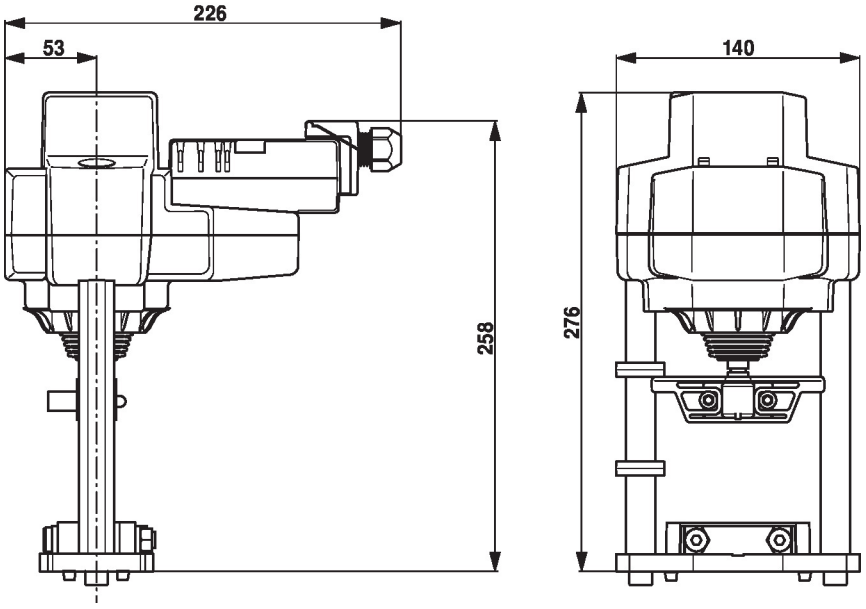

Further documentation

- The complete product range for water applications
- Data sheets for globe valves
- Installation instructions for actuators and/or globe valves
- Notes for project planning 2-way and 3-way globe valves
- General notes for project planning