Safety temperature limiter STB

For monitoring temperatures in heating water, hot water systems and other applications in heating, ventilation and air-conditioning systems. When the setpoint temperature is reached, the 1-pin changeover contact (SPDT) is switched and mechanically locked.
Manufacturer:
JUMO GmbH & Co. KG
Fulda - Deutschland
Item No.: 603070/0070-..

5 YEAR WARRANTY

Type Overview

Type	Output signal temperature switch	Additional features	Capillary
EXT-J-00734647	Changeover	Manual reset	1 m

Technical data

Electrical data	Electrical connection	Spring loaded terminal max. 2.5 mm²
	Cable entry	Cable gland with strain relief M20x1.5 mm, for cable ø6...12 mm
Functional data	Medium	Air Water
	Output signal temperature switch note	AC 230 V 16 (2.5) A @ Switch position 1-2 AC 230 V 2 (0.4) A @ Switch position 1-4 DC 230 V 0.25 A
	Switching reliability	Min. switching current 100 mA @ AC / DC 24 V
Measuring data	Measured values	Temperature
Specification temperature passive	Measuring range	70...130°C [160...265°F]
	Adjustment range	70...130
	Accuracy temperature	+0K / -12K (lower half, 70...100°C) +0K / -5K (upper half, 100...130°C)
Safety data	Degree of protection IEC/EN	IP54 IP protection with mounted sealing elements
	Pressure equipment directive	CE according to 2014/68/EU
	EU Conformity	CE Marking
	Certification IEC/EN	DIN EN 60730-1 and DIN EN 14597
	Quality Standard	ISO 9001
	Type of action	Type 2BFHKLNPV
	Ambient humidity	Max. 95% RH, non-condensing
	Ambient temperature	0...80°C [32...175°F]
	Fluid temperature	Up to max. 155°C
	Storage temperature	-30...80°C [-22...176°F]
Materials	Housing	Bottom: PA (RAL 7001, silver grey) Cover: ABS with inspection glass (PMMA) Seal: NBR
	Cable gland	PA6, black
	Capillary	Copper

Safety notes

This device has been designed for use in stationary heating, ventilation and air-conditioning systems and must not be used outside the specified field of application. Unauthorised modifications are prohibited. The product must not be used in relation with any equipment that in case of a failure may threaten humans, animals or assets.

Ensure all power is disconnected before installing. Do not connect to live/operating equipment.

Only authorised specialists may carry out installation. All applicable legal or institutional installation regulations must be complied with during installation.

The device contains electrical and electronic components and must not be disposed of as household refuse. All locally valid regulations and requirements must be observed.

During installation, testing, servicing and troubleshooting of this product, it may be necessary to work with live electrical components. Have a qualified licensed electrician or other individual who has been properly trained in handling live electrical components perform these tasks. Failure to follow all electrical safety precautions when exposed to live electrical components could result in death or serious injury.

Remarks

Switching function

If the temperature on the sensor exceeds the setpoint value, the changeover is activated by the transmission mechanics and the electrical circuit is opened resp. closed and the changeover is mechanically locked.

The unlocking difference is about 10K. If the temperature falls below the selected setpoint value then the changeover can be manually unlocked again.

Reset function

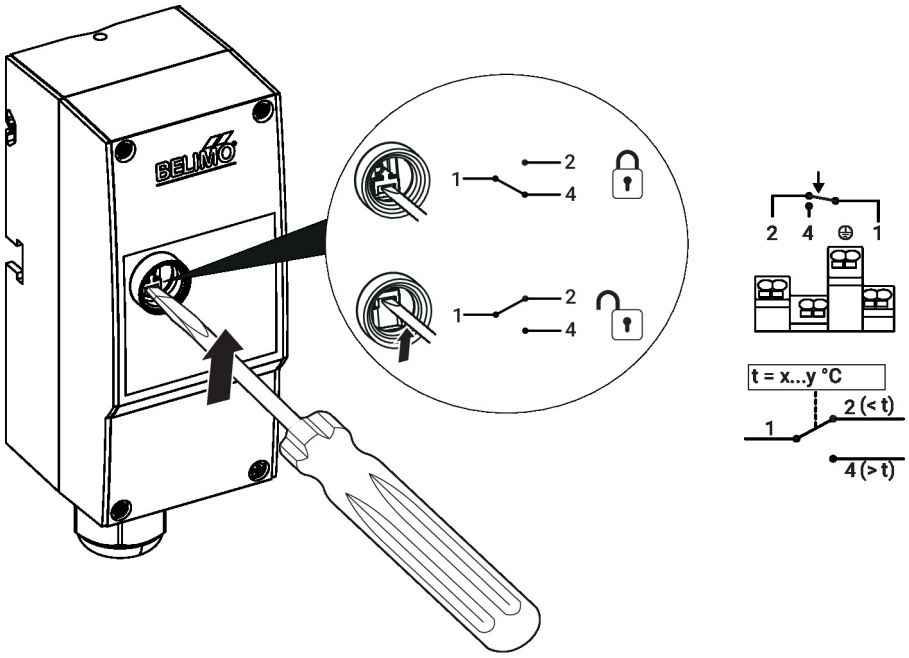

Installation notes

Installation situation

The safety temperature limiter can be installed in four different ways.

Pipe contact mounting

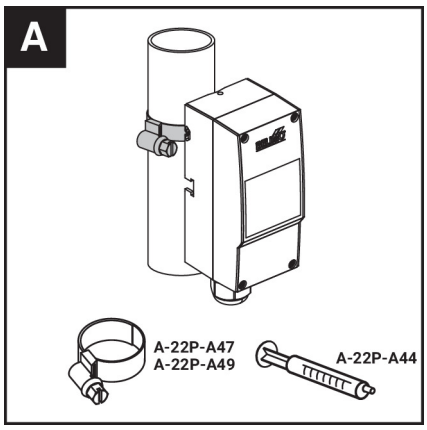

The tightening strap is included in the scope of delivery

Thermowell mounting

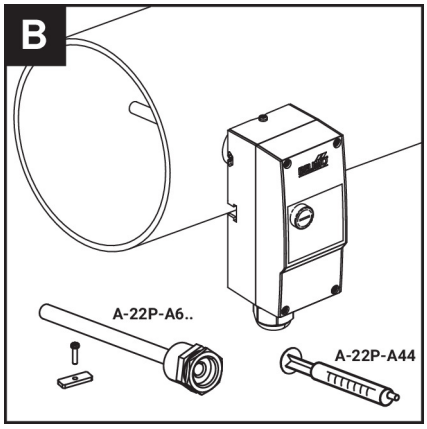

The thermowell A-22P-A6... is available as an optional accessory

Wall mounting with probe in flange

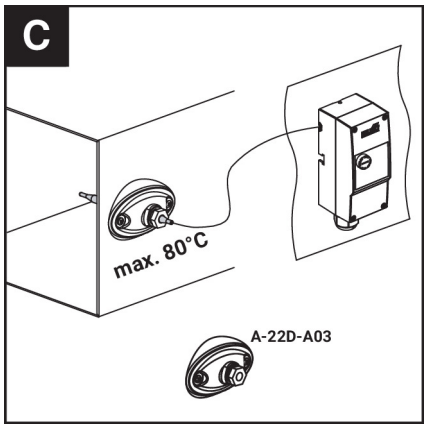

The A-22D-A03 flange is available as an optional accessory

Installation notes

Wall mounting with probe in immersion sleeve

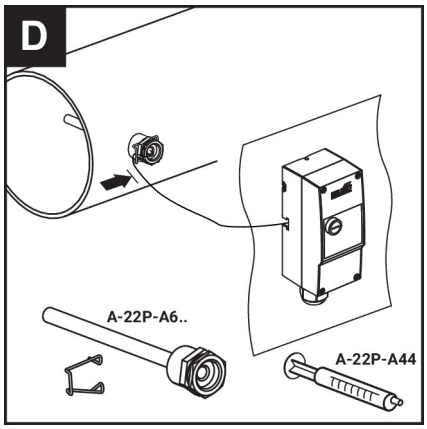

The thermowell A-22P-A6... is available as an optional accessory

Parts included

Fixing strap for pipes from ø15...100 mm

Accessories

Optional accessories

Description	Type
Thermal contact fluid	A-22P-A44
Fixing strap, for pipes ø20...110 mm [0.8...4.3"]	A-22P-A47
Fixing strap, for pipes ø20...250 mm [0.8...9.8"]	A-22P-A49
Mounting flange for sensor probe 6 mm, up to max. 120°C [248°F], Plastic	A-22D-A03

Recommended accessories water

Description	Type
Thermowell kit (fabricated) Brass nickel-plated, 100 mm, G 1/2", SW22	A-22P-A61
Thermowell kit (fabricated) Brass nickel-plated, 150 mm, G 1/2", SW22	A-22P-A62
Thermowell kit (fabricated) Brass nickel-plated, 200 mm, G 1/2", SW22	A-22P-A63
Thermowell kit (fabricated) Stainless steel, 100 mm, G 1/2", SW22	A-22P-A64
Thermowell kit (fabricated) Stainless steel, 150 mm, G 1/2", SW22	A-22P-A65
Thermowell kit (fabricated) Stainless steel, 200 mm, G 1/2", SW22	A-22P-A66

Wiring diagram

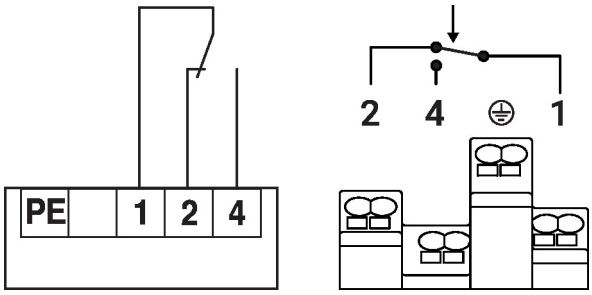

If the capillary leaks, the electrical circuit 1-4 is permanently closed. Unlocking is no longer possible.

Dimensions

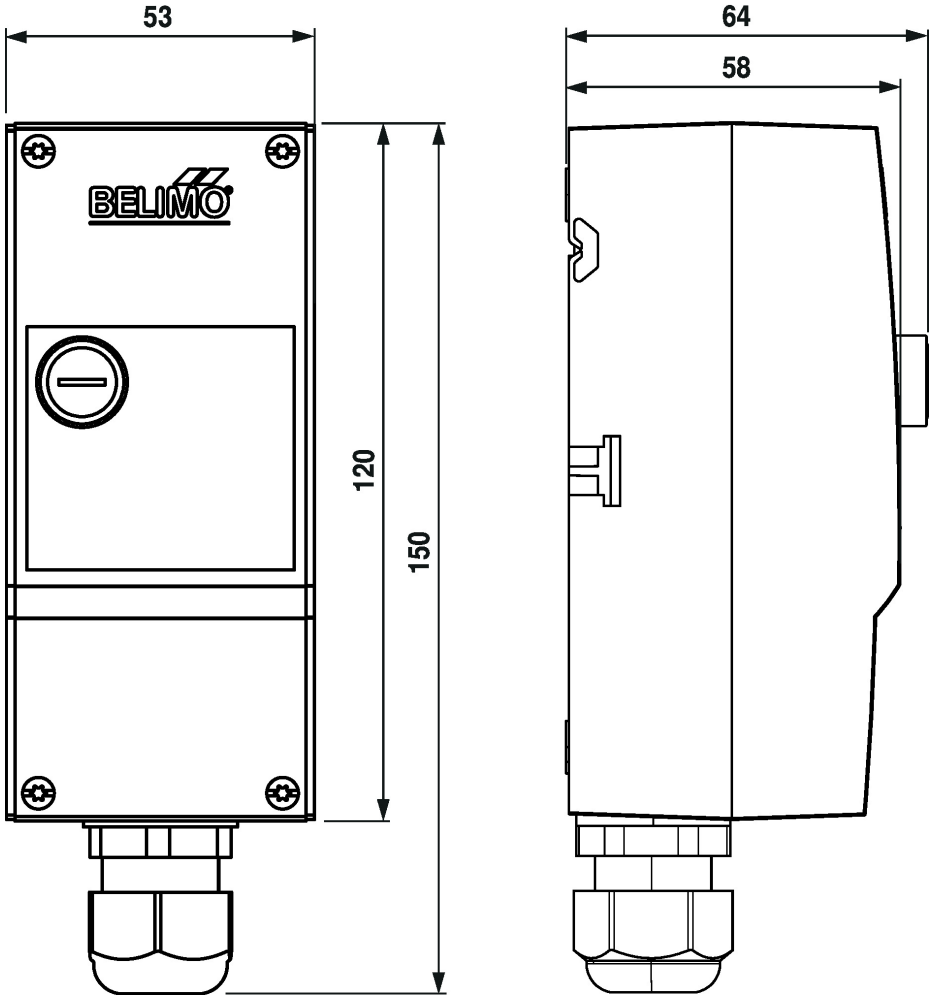

Type	Weight
EXT-J-00734647	0.31 kg