Globe valve (partially pressure-balanced), 2-way, Flange, PN 16

• For closed water and steam systems in the non-critical range
• For modulating control of air-handling and heating systems on the water side

Picture may differ from product

Type overview

Type	DN	Kvs [m³/h]	Stroke	PN	n(gl)	Sv min.
H640SP	40	25	15 mm	16	3	100
H650SP	50	40	15 mm	16	3	100
H664SP	65	58	18 mm	16	3	100
H679SP	80	90	18 mm	16	3	100
H6100SP	100	145	30 mm	16	3	100
H6125SP	125	220	40 mm	16	3	100
H6150SP	150	320	40 mm	16	3	100

Technical data

Functional data	Fluid	Water and steam (Δp/P1 <0.4), water with glycol up to max. 50% vol.
	Fluid temperature	5...150°C [41...302°F]
	Fluid temperature note	120°C up to 1600 kPa 150°C up to 1400 kPa
	Flow characteristic	equal percentage (VDI/VDE 2173), optimised in the opening range
	Leakage rate	max. 0.05% of the Kvs value
	Closing point	Bottom (▼)
	Pipe connection	Flange according to ISO 7005-2
	Installation orientation	upright to horizontal (in relation to the spindle)
	Servicing	maintenance-free
Materials	Valve body	EN-GJL-250 (GG 25)
	Body finish	with protective paint
	Closing element	Stainless steel
	Spindle	Stainless steel
	Spindle seal	PTFE V-ring
	Seat	Stainless steel

Safety notes

- The valve has been designed for use in stationary heating, ventilation and air-conditioning systems and must not be used outside the specified field of application, especially in aircraft or in any other airborne means of transport.
- Only authorised specialists may carry out installation. All applicable legal or institutional installation regulations must be complied with during installation.
- The valve does not contain any parts that can be replaced or repaired by the user.
- The valve may not be disposed of as household refuse. All locally valid regulations and requirements must be observed.
- When determining the flow rate characteristic of controlled devices, the recognised directives must be observed.

Product features

Operating mode

The globe valve is adjusted by a globe valve actuator. The actuators are controlled by a commercially available modulating or 3-point control system and move the valve cone, which acts as a mixing device, to the opening position dictated by the control signal. High close-off pressures are permitted as a result of both the partial pressure relief stem and the overflow channels in the valve.

Flow characteristic

An equal percentage flow characteristic is produced by the profile of the valve cone.

Fluid velocity

Standard values for low-noise operation in HVAC systems are fluid velocities of 1...2 m/s. At fluid velocities above 2 m/s, further flow effects like noise as well as cavitation can occur. This can reduce the service life of a valve depending on the situation.

Accessories

Electrical accessories

Description	Type
Stem heater for LV.., NV.., SV.. actuator	ZH24-1-A

Installation notes

Permissible installation orientation

The globe valve may be mounted upright to horizontal. It is not permissible to mount the globe valves with the stem pointing downwards.

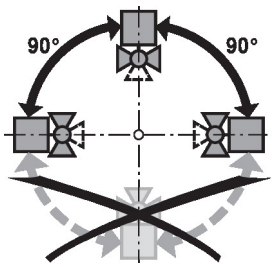

Water quality requirements

The water quality requirements specified in VDI 2035 must be adhered to.

Belimo valves are regulating devices. For the valves to function correctly in the long term, they must be kept free from particle debris (e.g. welding beads during installation work). The installation of a suitable strainer is recommended.

Installation notes

Servicing

Globe valves and globe valve actuators are maintenance-free.

Before any service work on the control element is carried out, it is essential to isolate the globe valve actuator from the power supply (by unplugging the electrical cables if necessary). Any pumps in the part of the piping system concerned must also be switched off and the appropriate slide valves closed (allow all components to cool down first if necessary and always reduce the system pressure to ambient pressure level).

The system must not be returned to service until the globe valve and the globe valve actuator have been reassembled correctly in accordance with the instructions and the pipeline has been refilled by professionally trained personnel.

Flow direction

The direction of flow, specified by an arrow on the housing, is to be complied with, since otherwise the valve could become damaged.

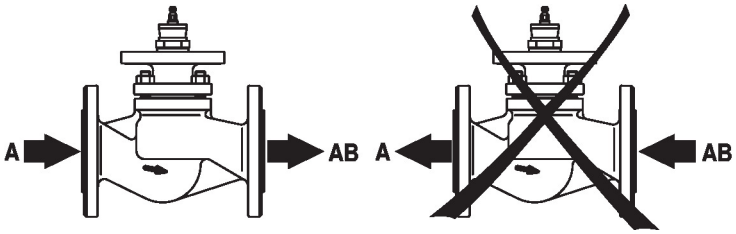

Differential and close-off pressure

The maximum differential and close-off pressure of globe valves depends on the mounted globe valve actuator. To ensure optimum operation and maximum service life, the maximum differential and close-off pressure in the table below must not be exceeded.

p_s <1600 kPa (PN16) t= 5... 120°C p_s <1400 kPa (PN16) t= 121... 150°C		NV..A.. 1000N		SV..A.. 1500N		AVK..A.. 2000N		EV..A.. 2500N		RV..A.. 4500N	
A AB	DN	Δps [kPa]	Δpmax [kPa]	Δps [kPa]	Δpmax [kPa]	Δps [kPa]	Δpmax [kPa]	Δps [kPa]	Δpmax [kPa]	Δps [kPa]	Δpmax [kPa]
H640SP	40	1600	1000	1600	1000						
H650SP	50	1600	1000	1600	1000						
H664SP	65	1600	1000	1600	1000						
H679SP	80	1600	1000	1600	1000						
H6100SP	100					600	600	600	600	600	600
H6125SP	125							600	600	600	600
H6150SP	150							600	600	600	600

Dimensions

Dimensional drawings

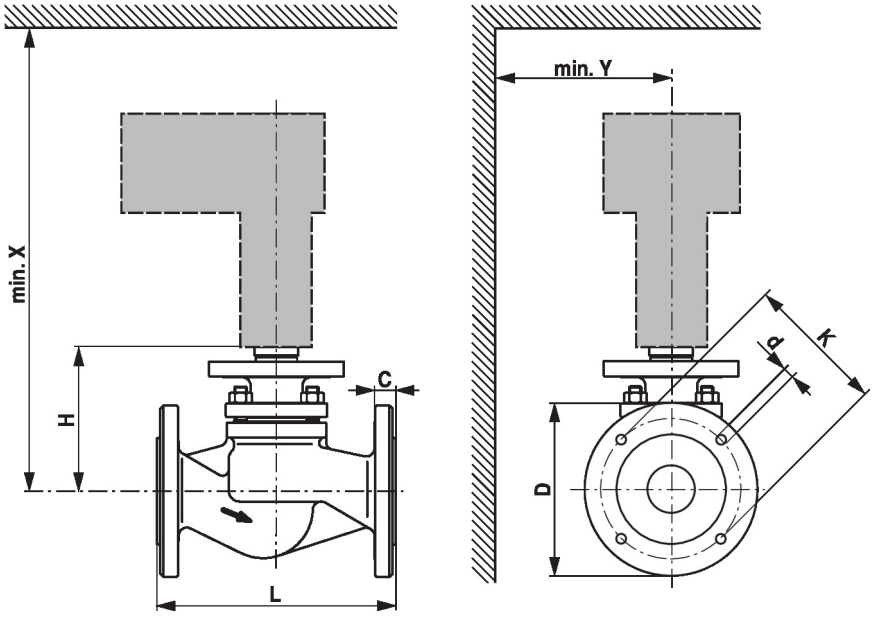

X/Y: Minimum distance with respect to the valve centre.
The actuator dimensions can be found on the respective actuator data sheet.

Type	DN	L [mm]	H [mm]	C [mm]	D [mm]	d [mm]	K [mm]	X [mm]	Y [mm]	kg
H640SP	40	200	136	18	150	4 x 18	110	390	100	9.6
H650SP	50	230	142	20	165	4 x 18	125	390	100	12
H664SP	65	290	155	20	185	4 x 18	145	400	100	18
H679SP	80	310	173	22	200	8 x 18	160	420	150	23
H6100SP	100	350	193	24	220	8 x 18	180	540	150	36
H6125SP	125	400	245	26	250	8 x 18	210	600	150	47
H6150SP	150	480	306	26	285	8 x 22	240	660	150	65

Further documentation

- The complete product range for water applications
- Data sheets for globe valve actuators
- Installation instructions for valves and/or globe valve actuators
- Notes for project planning 2-way and 3-way globe valves