Globe valve, 3-way, Flange, PN 16

- For closed water systems
- For modulating control of air-handling and heating systems on the water side

Picture may differ from product

Type overview

Type	DN	Kvs [m³/h]	Stroke	PN	Sv min.
H7200W630-S7	200	630	65 mm	16	30
H7250W1000-S7	250	1000	65 mm	16	30

Technical data

Functional data	Fluid	Water, water with glycol up to max. 50% vol.
	Fluid temperature	-10...120°C [14...248°F]
	Fluid temperature note	At a fluid temperature of -10...2°C, a spindle heating is needed.
	Flow characteristic	Control path A – AB: linear (VDI/VDE 2173), Bypass B – AB: linear (VDI/VDE 2173)
	Leakage rate	Control path A – AB: max. 0.05% of the Kvs value; Bypass B – AB: max. 1% of the Kvs value
	Closing point	Top (▲)
	Pipe connection	Flange according to ISO 7005-2
	Installation orientation	upright to horizontal (in relation to the spindle)
	Servicing	maintenance-free
Materials	Valve body	EN-GJL-250 (GG 25)
	Body finish	with protective paint
	Closing element	Stainless steel
	Spindle	Stainless steel
	Spindle seal	EPDM
	Seat	Stainless steel

Safety notes

- The valve has been designed for use in stationary heating, ventilation and air-conditioning systems and must not be used outside the specified field of application, especially in aircraft or in any other airborne means of transport.
- Only authorised specialists may carry out installation. All applicable legal or institutional installation regulations must be complied with during installation.
- The valve does not contain any parts that can be replaced or repaired by the user.
- The valve may not be disposed of as household refuse. All locally valid regulations and requirements must be observed.
- When determining the flow rate characteristic of controlled devices, the recognised directives must be observed.

Product features

Operating mode

The large globe valve is adjusted by a long stroke actuator. The actuators are controlled by a commercially available modulating or 3-point control system and move the valve cone, which acts as a mixing device, to the opening position dictated by the control signal.

Flow characteristic

A linear flow characteristic is produced in the direction of flow by the profile of the valve cone. The bypass exhibits a linear characteristic curve.

Fluid velocity

Standard values for low-noise operation in HVAC systems are fluid velocities of 1...2 m/s. At fluid velocities above 2 m/s, further flow effects like noise as well as cavitation can occur. This can reduce the service life of a valve depending on the situation.

Accessories

Electrical accessories

Description	Type
Stem heater for valves DN 65...250, AC/DC 24 V, 60 W	ZH24-1-B

Installation notes

Permissible installation orientation

The large globe valves may be mounted from upright to horizontal. It is not permissible to mount the large globe valves with the stem pointing downwards.

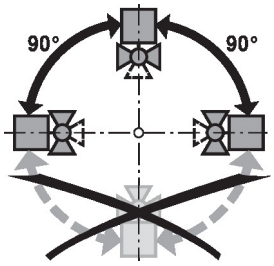

Water quality requirements

The water quality requirements specified in VDI 2035 must be adhered to.

Belimo valves are regulating devices. For the valves to function correctly in the long term, they must be kept free from particle debris (e.g. welding beads during installation work). The installation of a suitable strainer is recommended.

Servicing

Large globe valves and long stroke actuators are maintenance-free.

Before any service work on the control element is carried out, it is essential to isolate the long stroke actuator from the power supply (by unplugging the electrical cables if necessary). Any pumps in the part of the piping system concerned must also be switched off and the appropriate slide valves closed (allow all components to cool down first if necessary and always reduce the system pressure to ambient pressure level).

The system must not be returned to service until the large globe valve and the long stroke actuator have been correctly reassembled in accordance with the instructions and the pipeline has been refilled by professionally trained personnel.

Installation notes

Flow direction

The direction of flow, specified by an arrow on the housing, is to be complied with, since otherwise the valve could become damaged.

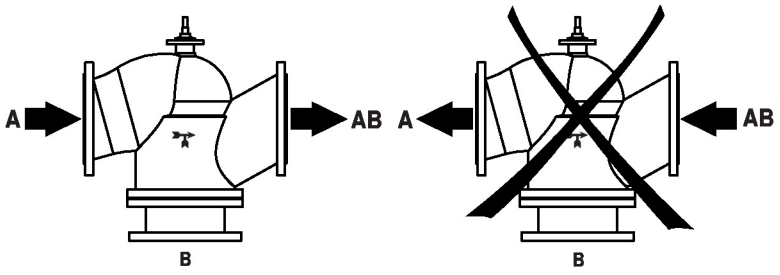

Differential and close-off pressure

The maximum differential and close-off pressure of globe valves depends on the mounted globe valve actuator. To ensure optimum operation and maximum service life, the maximum differential and close-off pressure in the table below must not be exceeded.

ps <1600 kPa (PN16) t= 5... 120°C		GV12... 15000 N	
	DN	Δp_s [kPa]	Δp_{max} [kPa]
H7200W630-S7	200	420	250
H7250W1000-S7	250	270	250

General notes

Delivery notes

Large globe valve and long stroke actuator are supplied pre-mounted.

These valves are fabricated only when orders are received.

Dimensions

Dimensional drawings

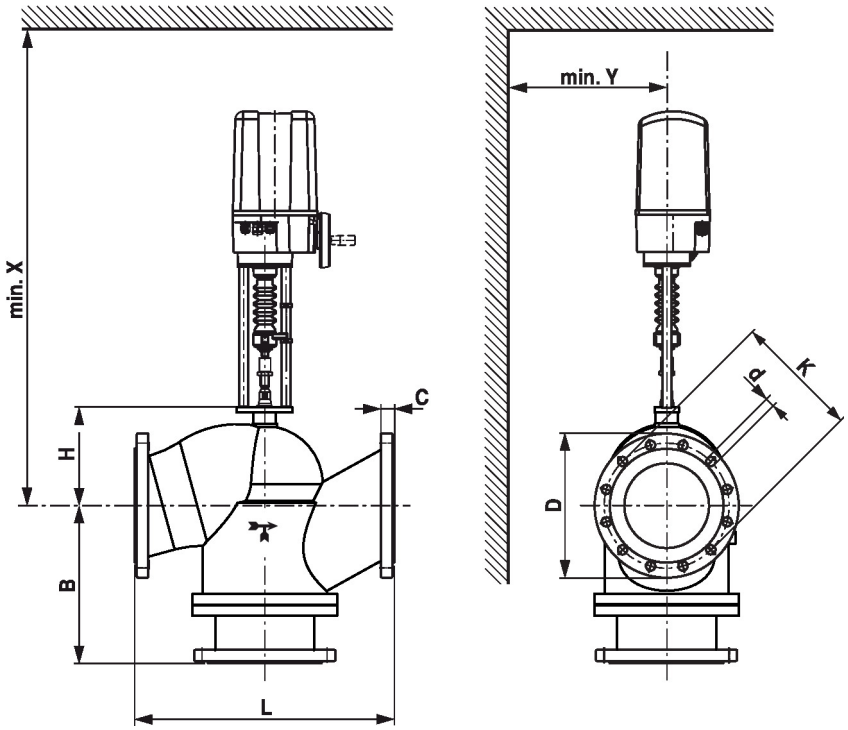

Dimensions

X/Y: Minimum distance with respect to the valve centre.
The actuator dimensions can be found on the respective actuator data sheet.

Type	DN	L [mm]	B [mm]	H [mm]	C [mm]	D [mm]	d [mm]	K [mm]	X [mm]	Y [mm]	kg
H7200W630-S7	200	600	379	236	30	340	12 x 22	295	1210	200	173
H7250W1000-S7	250	730	439	282	32	405	12 x 26	355	1270	250	283

Further documentation

- The complete product range for water applications
- Data sheets long stroke actuators
- Installation instructions for valves and/or long stroke actuators
- Notes for project planning 2-way and 3-way globe valves