Rotary actuator in connection with a mounting kit for the motorisation of the most common mixing valves in HVAC systems

- Torque motor 10 Nm
- Nominal voltage AC/DC 24 V
- Control modulating 2...10 V
- Position feedback 2...10 V
- Running time motor 140 s

Picture may differ from product

Technical data

Electrical data	Nominal voltage	AC/DC 24 V
	Nominal voltage frequency	50/60 Hz
	Nominal voltage range	AC 19.2...28.8 V / DC 19.2...28.8 V
	Power consumption in operation	1.5 W
	Power consumption for wire sizing	2.5 VA
	Connection supply / control	Terminals 4 mm² (cable ø6...8 mm, 4-wire)
	Parallel operation	Yes (note the performance data)
Functional data	Torque motor	10 Nm
	Operating range Y	2...10 V
	Operating range Y note	Operating range selectable 0...10 V or 2...10 V
	Position feedback U	2...10 V
	Position accuracy	±5%
	Direction of motion motor	clockwise rotation (cw)
	Manual override	temporary and permanent gear train disengagement with rotary knob on the housing
	Angle of rotation	90°
	Running time motor	140 s / 90°
	Sound power level, motor	37 dB(A)
	Duty cycle value	75% (= active time 140 s / operating time 187 s)
	Position indication	Reversible scale plate
Safety data	Protection class IEC/EN	III, Safety Extra-Low Voltage (SELV)
	Degree of protection IEC/EN	IP40
	EMC	CE according to 2014/30/EU
	Type of action	Type 1
	Rated impulse voltage supply / control	0.8 kV
	Pollution degree	3
	Ambient humidity	Max. 95% RH, non-condensing
	Ambient temperature	0...50°C [32...122°F]
	Storage temperature	-30...80°C [-22...176°F]
	Servicing	maintenance-free
Weight	Weight	0.35 kg
Housing colours	Housing cover	orange

Technical data

Housing colours	Housing base	black

Safety notes

- This device has been designed for use in stationary heating, ventilation and air-conditioning systems and must not be used outside the specified field of application, especially in aircraft or in any other airborne means of transport.
- The actuator is to be protected against moisture. It is not suitable for outdoor applications.
- To calculate the torque required, the specifications supplied by the mixing valve manufacturer must be observed.
- Only authorised specialists may carry out installation. All applicable legal or institutional installation regulations must be complied with during installation.
- The correct functioning of the strain relief for the cable in the actuator housing is to be checked.
- The installer must check for correct principle of operation after installation.
- The switch for changing the direction of rotation and operating range may only be adjusted by authorised specialists. The direction of rotation may not be changed when frost protection control is applied.
- The device does not contain any parts that can be replaced or repaired by the user.
- The device contains electrical and electronic components and must not be disposed of as household refuse. All locally valid regulations and requirements must be observed.
- Caution: Low voltage!

Product features

Operating mode
The actuator is controlled with a control signal Y (note the operating range) and drives to the position defined by the control signal.

Simple direct mounting
Simple direct mounting with only one screw. The stud bolt included in delivery serves as an anti-rotation mechanism. The mounting orientation can be freely selected in steps of 90°.

Manual override
Manual override with lever possible. Temporary gear train disengagement by pushing the rotary knob. Permanent disengagement by pushing and simultaneous rotating the rotary knob clockwise 90°.

High functional reliability
The actuator is overload protected and automatically stops when the end stop is reached.

The actuator switches off for seven seconds in the case of blocking, then attempts to restart. If the blocked condition persists, the actuator attempts to restart once every two minutes a total of 15 times and subsequently only once every two hours.

Accessories

Mechanical accessories

Description	Type
Mounting kit for LK mixing valve	MS-NRA
Mounting kit for Barberi mixing valves	MS-NRB
Mounting kit for Honeywell/Centra DR..MA mixing valves	MS-NRC
Mounting kit for Honeywell/Centra DRU.. mixing valves	MS-NRC1
Mounting kit for mixing valves with 12 mm round shaft	MS-NRE
Mounting kit for ESBE mixing valves VRG/VRB/VRH	MS-NRE6
Mounting kit for Hora mixing valves	MS-NRH
Mounting kit for Siemens/Landis&Stäfa mixing valves VCI/VBG/VBF	MS-NRL
Mounting kit for Lazzari mixing valves	MS-NRLA
Mounting kit for Lovato mixing valves	MS-NRLO
Mounting kit for Satchwell MB mixing valves	MS-NRS
Mounting kit for Satchwell MBF mixing valves	MS-NRSF

Electrical installation

Supply from isolating transformer.

AC/DC 24 V, modulating

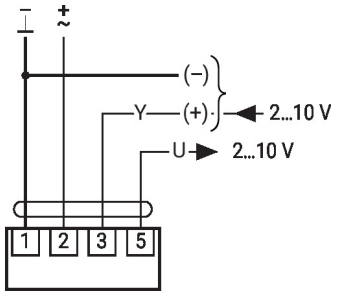

Operating controls and indicators

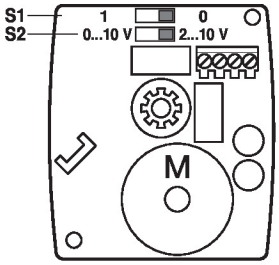

S1		
0 *	0	Y = 0%
1	1	Y = 0%

S2	
2 ... 10 V *	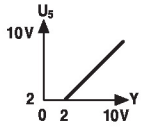
0 ... 10 V	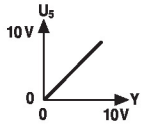
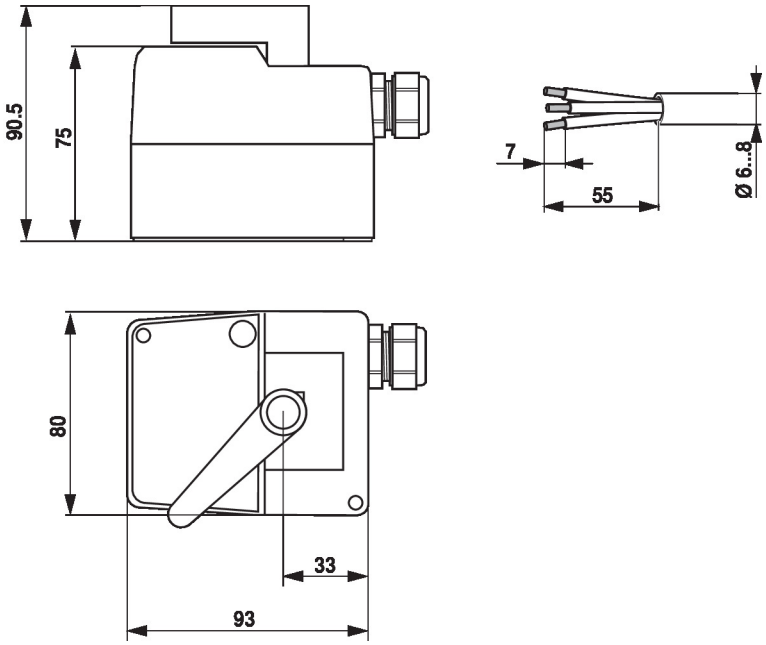
Dimensions