Globe valve actuator for 2-way and 3-way globe valves

- Actuating force 1000 N
- Nominal voltage AC/DC 24 V
- Control Open/close, 3-point
- Stroke 20 mm

Picture may differ from product

Technical data

Electrical data	Nominal voltage	AC/DC 24 V
	Nominal voltage frequency	50/60 Hz
	Nominal voltage range	AC 19.2...28.8 V / DC 21.6...28.8 V
	Power consumption in operation	1.5 W
	Power consumption in rest position	0.5 W
	Power consumption for wire sizing	3 VA
	Connection supply / control	Terminals 4 mm² (cable ø4...10 mm)
	Parallel operation	Yes (note the performance data)
Functional data	Actuating force motor	1000 N
	Manual override	with push-button, can be locked
	Stroke	20 mm
	Running time motor	35 s / 20 mm
	Sound power level, motor	60 dB(A)
	Position indication	Mechanical, 5...20 mm stroke
Safety data	Protection class IEC/EN	III, Safety Extra-Low Voltage (SELV)
	Power source UL	Class 2 Supply
	Degree of protection IEC/EN	IP54
	Degree of protection NEMA/UL	NEMA 2
	Housing	UL Enclosure Type 2
	EMC	CE according to 2014/30/EU
	Low voltage directive	CE according to 2014/35/EU
	Certification IEC/EN	IEC/EN 60730-1 and IEC/EN 60730-2-14
	UL Approval	cULus according to UL60730-1A, UL60730-2-14 and CAN/CSA E60730-1 The UL marking on the actuator depends on the production site, the device is UL-compliant in any case
	Type of action	Type 1
	Rated impulse voltage supply / control	0.8 kV
	Pollution degree	3
	Ambient humidity	Max. 95% RH, non-condensing
	Ambient temperature	0...50°C [32...122°F]
	Storage temperature	-40...80°C [-40...176°F]
	Servicing	maintenance-free
Weight	Weight	1.9 kg

Safety notes

- This device has been designed for use in stationary heating, ventilation and air-conditioning systems and must not be used outside the specified field of application, especially in aircraft or in any other airborne means of transport.
- Outdoor application: only possible in case that no (sea) water, snow, ice, insolation or aggressive gases interfere directly with the device and that it is ensured that the ambient conditions remain within the thresholds according to the data sheet at any time.
- Only authorised specialists may carry out installation. All applicable legal or institutional installation regulations must be complied with during installation.
- The switch for changing the direction of motion and so the closing point may be adjusted only by authorised specialists. The direction of motion is critical, particularly in connection with frost protection circuits.
- The device may only be opened at the manufacturer's site. It does not contain any parts that can be replaced or repaired by the user.
- The device contains electrical and electronic components and must not be disposed of as household refuse. All locally valid regulations and requirements must be observed.

Product features

Mounting on third-party valves
The RetroFIT+ actuators for installation on a wide range of valves from various manufacturers are comprised of an actuator, bracket, universal valve neck adapter and universal valve stem adapter. Adapt the valve neck and valve stem to begin with, then attach the RetroFIT+ bracket to the valve neck adapter. Now fit the RetroFIT+ actuator into the bracket and connect it to the valve. Whilst taking the position of the valve closing point into account, secure the actuator to the bracket and then conduct the commissioning process. The valve neck adapter/actuator can be rotated by 360° on the valve neck, provided the size of the installed valve permits.

Mounting on Belimo valves
Use standard actuators from Belimo for mounting on Belimo globe valves. The installation of RetroFIT+ actuators on Belimo globe valves is technically possible.

Manual override
Manual override with push-button possible (the gear train is disengaged for as long as the button is pressed or remains locked).

The stroke can be adjusted by using a hexagon socket screw key (4 mm), which is inserted into the top of the actuator. The stroke shaft extends when the key is rotated clockwise.

High functional reliability
The actuator is overload protected, requires no limit switches and automatically stops when the end stop is reached.

Position indication
The stroke is indicated mechanically on the bracket with tabs. The stroke range adjusts itself automatically during operation.

Home position
Factory setting: Actuator stem is retracted.

Setting direction of motion
When actuated, the direction-of-stroke switch changes the direction of motion in normal operation.

Accessories

Electrical accessories

Description	Type
Auxiliary switch 2x SPDT add-on	S2A-H

Mechanical accessories

Description	Type
Spacer ring for LDM, stroke 20 mm	ZNV-203
Spacer ring for Sauter, stroke 20 mm	ZNV-204
Adapter kit Danfoss	ZNV-205

Electrical installation

Supply from isolating transformer.
Parallel connection of other actuators possible. Observe the performance data.
Direction of stroke switch factory setting: Actuator stem retracted (▲).

AC/DC 24 V, open/close

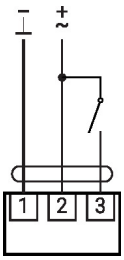

AC/DC 24 V, 3-point

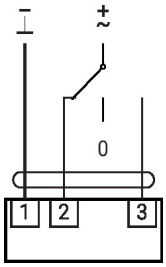

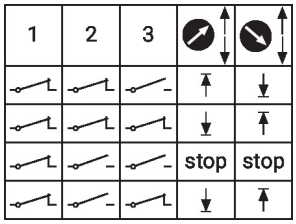

Operating controls and indicators

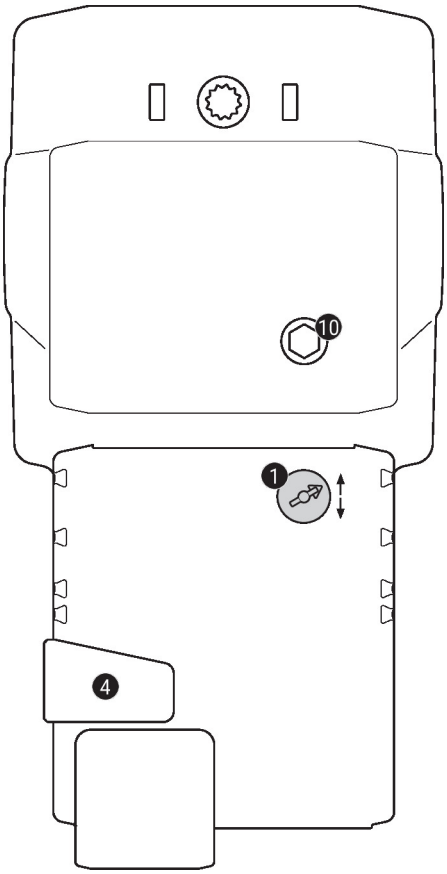

1 Direction of stroke switch

Switch over:	Direction of stroke changes

4 Manual override button

Press button:	Gear train disengages, motor stops, manual override possible
Release button:	Gear train engages, standard mode

10 Manual override

Clockwise:	Actuator stem extends
Counterclockwise:	Actuator stem retracts

Dimensions

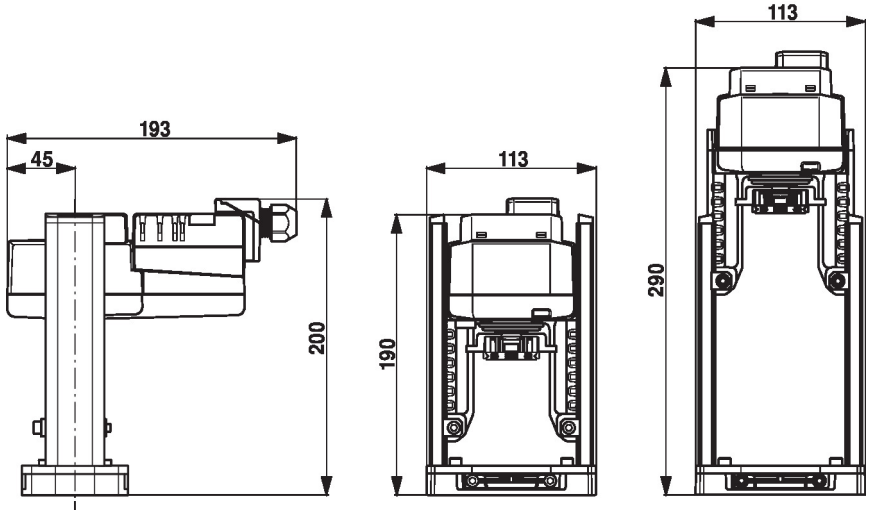

Further documentation

- Installation instructions for actuators