Characterised control valve, 6-way, Internal thread

- Two sequences (cooling/heating) with one 90° rotary actuator
- Switching or modulating control on the water side of thermal heating/cooling elements
- For closed water systems

Picture may differ from product

Type overview

Type	DN	Rp ["]	Kvs (Sequence 1) [m³/h]	Kvs (Sequence 2) [m³/h]	PN
R3015-P25-P25-B2	15	1/2	0.25	0.25	16
R3015-P25-P4-B2	15	1/2	0.25	0.4	16
R3015-P25-P63-B2	15	1/2	0.25	0.63	16
R3015-P25-1-B2	15	1/2	0.25	1	16
R3015-P25-1P3-B2	15	1/2	0.25	1.3	16
R3015-P25-1P8-B2	15	1/2	0.25	1.8	16
R3015-P4-P25-B2	15	1/2	0.4	0.25	16
R3015-P4-P4-B2	15	1/2	0.4	0.4	16
R3015-P4-P63-B2	15	1/2	0.4	0.63	16
R3015-P4-1-B2	15	1/2	0.4	1	16
R3015-P4-1P3-B2	15	1/2	0.4	1.3	16
R3015-P4-1P8-B2	15	1/2	0.4	1.8	16
R3015-P63-P25-B2	15	1/2	0.63	0.25	16
R3015-P63-P4-B2	15	1/2	0.63	0.4	16
R3015-P63-P63-B2	15	1/2	0.63	0.63	16
R3015-P63-1-B2	15	1/2	0.63	1	16
R3015-P63-1P3-B2	15	1/2	0.63	1.3	16
R3015-P63-1P8-B2	15	1/2	0.63	1.8	16
R3015-1-P25-B2	15	1/2	1	0.25	16
R3015-1-P4-B2	15	1/2	1	0.4	16
R3015-1-P63-B2	15	1/2	1	0.63	16
R3015-1-1-B2	15	1/2	1	1	16
R3015-1-1P3-B2	15	1/2	1	1.3	16
R3015-1-1P8-B2	15	1/2	1	1.8	16
R3015-1P3-P25-B2	15	1/2	1.3	0.25	16
R3015-1P3-P4-B2	15	1/2	1.3	0.4	16
R3015-1P3-P63-B2	15	1/2	1.3	0.63	16
R3015-1P3-1-B2	15	1/2	1.3	1	16
R3015-1P3-1P3-B2	15	1/2	1.3	1.3	16
R3015-1P3-1P8-B2	15	1/2	1.3	1.8	16
R3015-1P8-P25-B2	15	1/2	1.8	0.25	16
R3015-1P8-P4-B2	15	1/2	1.8	0.4	16
R3015-1P8-P63-B2	15	1/2	1.8	0.63	16
R3015-1P8-1-B2	15	1/2	1.8	1	16
R3015-1P8-1P3-B2	15	1/2	1.8	1.3	16
R3015-1P8-1P8-B2	15	1/2	1.8	1.8	16
R3020-P63-1P6-B2	20	3/4	0.63	1.6	16
R3020-P63-2P5-B2	20	3/4	0.63	2.5	16
R3020-P63-4-B2	20	3/4	0.63	4	16
R3020-1-1P6-B2	20	3/4	1	1.6	16
R3020-1-2P5-B2	20	3/4	1	2.5	16
R3020-1-4-B2	20	3/4	1	4	16
R3020-1P6-P63-B2	20	3/4	1.6	0.63	16

Type overview

Type	DN	Rp ["]	Kvs (Sequence 1) [m³/h]	Kvs (Sequence 2) [m³/h]	PN
R3020-1P6-1-B2	20	3/4	1.6	1	16
R3020-1P6-1P6-B2	20	3/4	1.6	1.6	16
R3020-1P6-2P5-B2	20	3/4	1.6	2.5	16
R3020-1P6-4-B2	20	3/4	1.6	4	16
R3020-2P5-P63-B2	20	3/4	2.5	0.63	16
R3020-2P5-1-B2	20	3/4	2.5	1	16
R3020-2P5-1P6-B2	20	3/4	2.5	1.6	16
R3020-2P5-2P5-B2	20	3/4	2.5	2.5	16
R3020-2P5-4-B2	20	3/4	2.5	4	16
R3020-4-P63-B2	20	3/4	4	0.63	16
R3020-4-1-B2	20	3/4	4	1	16
R3020-4-1P6-B2	20	3/4	4	1.6	16
R3020-4-2P5-B2	20	3/4	4	2.5	16
R3020-4-4-B2	20	3/4	4	4	16
R3025-6P3-6P3-B3	25	1	6.3	6.3	16

Technical data

Functional data	Fluid	Water, water with glycol up to max. 50% vol.
	Fluid temperature	6...80°C [43...176°F]
	Close-off pressure Δps	350 kPa
	Differential pressure Δpmax	100 kPa
	Differential pressure note	low-noise operation Δpv100 <50 kPa
	Flow characteristic	linear
	Leakage rate	air-bubble tight, leakage rate A (EN 12266-1)
	Angle of rotation	90°
	Angle of rotation note	Sequence 1: 0...30° (cooling recommended) Dead zone: 30...60° Sequence 2: 60...90° (heating recommended)
	Pipe connection	Internal thread according to ISO 7-1
	Installation orientation	upright to horizontal (in relation to the spindle)
	Servicing	maintenance-free
Materials	Valve body	Nickel-plated brass body
	Body finish	nickel-plated
	Closing element	chrome-plated brass
	Spindle	nickel-plated brass
	Spindle seal	EPDM O-ring
	Seat	PTFE, O-ring EPDM
	Flow rate disc	Stainless steel

Safety notes

- The valve has been designed for use in stationary heating, ventilation and air-conditioning systems and must not be used outside the specified field of application, especially in aircraft or in any other airborne means of transport.
- Only authorised specialists may carry out installation. All applicable legal or institutional installation regulations must be complied with during installation.
- The valve does not contain any parts that can be replaced or repaired by the user.
- The valve may not be disposed of as household refuse. All locally valid regulations and requirements must be observed.
- When determining the flow rate characteristic of controlled devices, the recognised directives must be observed.

Product features

Operating mode

The 6-way characterised control valve is adjusted by a rotary actuator. The actuator is connected by a modulating control system or a bus signal and moves the ball of the ball valve to the position dictated by the control signal.

If the valve is adjusted in the clockwise direction (till the end stop), e.g. the cooling sequence is completely enabled; if the valve is adjusted in the counter-clockwise direction (90°), e.g. the heating sequence is completely enabled.

Pressure compensation

In cases of combined heating/cooling control elements, the fluid remains in the control element when in the closed position (no heating or cooling). The pressure of the enclosed fluid can rise or fall due to changes in fluid temperature caused by the ambient temperature. The 6-way characterised control valves have an integrated pressure relief function for the purpose of compensating for such pressure changes.

The pressure relief function is active in the closed position (45°) of the valve; reliable separation of sequences 1 and 2 continues. For additional information, consult the notes for project planning for the 6-way characterised control valve.

Accessories

Mechanical accessories

Description	Type
Elbow 90° male/female DN 15 Rp 1/2", R 1/2", Set of 2 pcs.	P2P15PE-1GE
Fixing bracket for 6-way valve DN 15/20	ZR-004
Pipe connector for ball valve with internal thread DN 15 Rp 1/2"	ZR2315
Elbow 90° male/female DN 20 Rp 3/4", R 3/4", Set of 2 pcs.	P2P20PF-1GE
Pipe connector for ball valve with internal thread DN 20 Rp 3/4"	ZR2320
Elbow 90° male/female DN 25 Rp 1", R 1", Set of 2 pcs.	P2P25PE-1GE
Fixing bracket for 6-way valve DN 25	ZR-005
Pipe connector for ball valve with internal thread DN 25 Rp 1"	ZR2325

Installation notes

Permissible installation orientation

The ball valve can be installed upright to horizontal. The ball valve may not be installed in a hanging position, i.e. with the spindle pointing downwards.

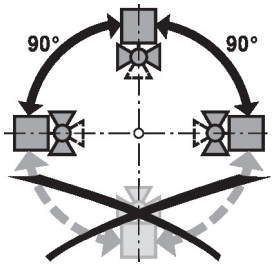

Water quality requirements

The water quality requirements specified in VDI 2035 must be adhered to.

Belimo valves are regulating devices. For the valves to function correctly in the long term, they must be kept free from particle debris (e.g. welding beads during installation work). The installation of a suitable strainer is recommended.

Servicing

Ball valves and rotary actuators are maintenance-free.

Before any service work on the control element is carried out, it is essential to isolate the rotary actuator from the power supply (by unplugging the electrical cable if necessary). Any pumps in the part of the piping system concerned must also be switched off and the appropriate slide valves closed (allow all components to cool down first if necessary and always reduce the system pressure to ambient pressure level).

The system must not be returned to service until the ball valve and the rotary actuator have been correctly reassembled in accordance with the instructions and the pipeline has been refilled by professionally trained personnel.

Installation notes

Flow direction

The flow direction must be observed. The position of the ball can be identified from the L-marking on the spindle.

Flow sequence 1 and sequence 2

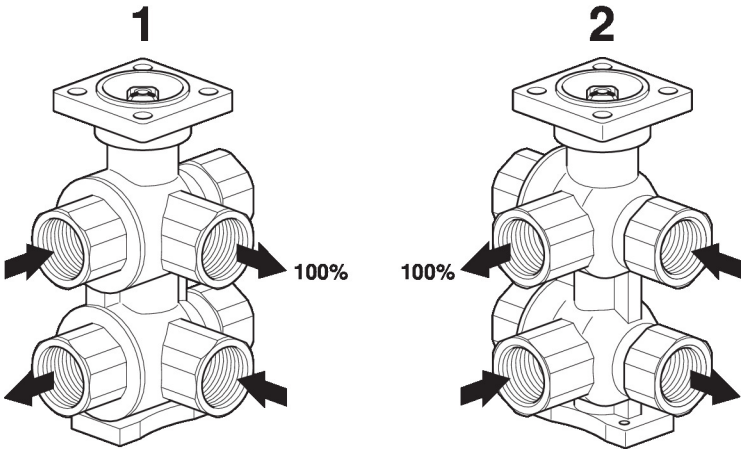

Valve characteristic curve

The lower diagram shows the valve characteristic curve in relation to the ball position.

Valve characteristic curve

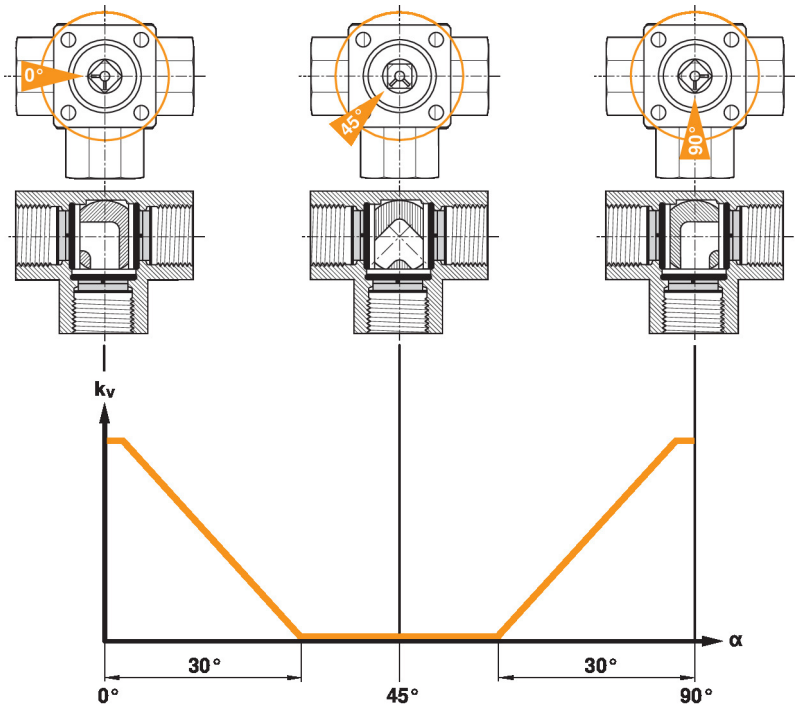

Using an additional flow limiter

When using additional flow limiting valves (e.g. PIQCV C2..QP(T)-.. with manual flow rate setting) or an additional pressure-independent control valve (e.g. motorised PIQCV) at the system level, it is not necessary to use the flow characterised disc in the 6-way valve in the system to reduce the Kvs value.

Dimensions

Dimensional drawings

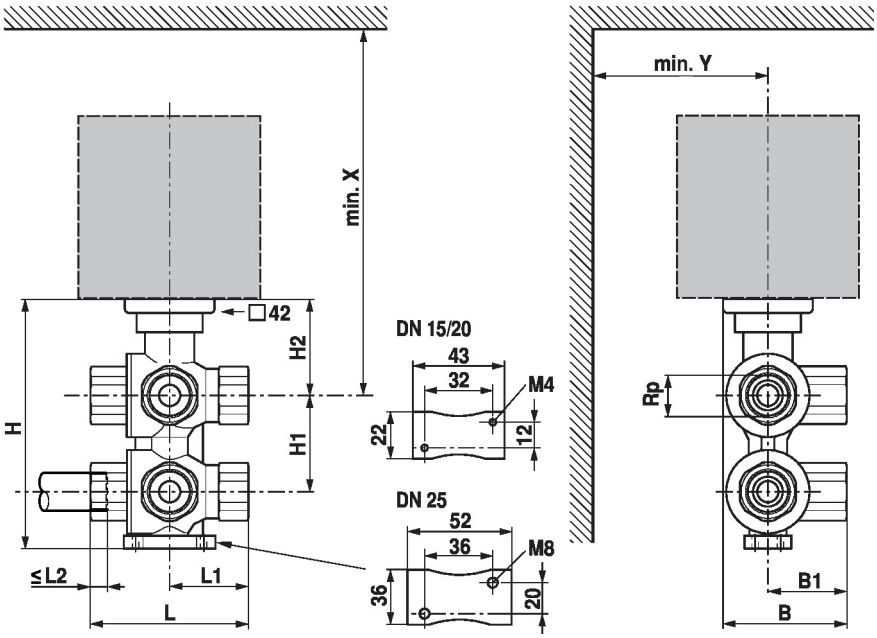

The actuator dimensions can be found on the respective actuator data sheet.

Type	DN	Rp [“]	L [mm]	L1 [mm]	L2 [mm]	B [mm]	B1 [mm]	H [mm]	H1 [mm]	H2 [mm]	X [mm]	Y [mm]	kg
R3015-..-..-B2	15	1/2	79	39.5	13	54	33	118	45	45	200	40	0.99
R3020-..-..-B2	20	3/4	100	50	14	70	43	146	59	52	230	40	2.0
R3025-..-..-B3	25	1	120	60	16	84.5	52	171	69	60	270	60	3.6

Further documentation

- The complete product range for water applications
- Data sheets for actuators
- Installation instructions for actuators and/or ball valves
- Notes for project planning for 6-way characterised control valves