Changeover ball valve, 3-way, Flange, PN 6

- For closed water systems
- For switching functions and open/close controls on the water side of air handling systems and heating systems
- Air-bubble tight (control path A – AB)

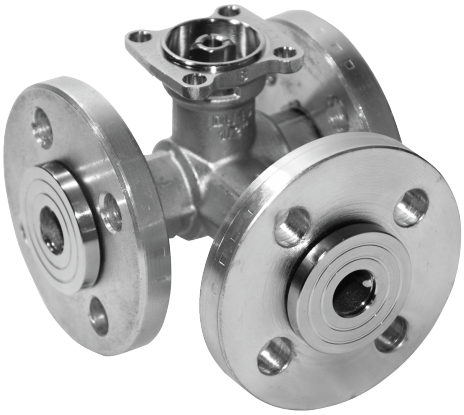

Picture may differ from product

Type overview

Type	DN	Kvs [m³/h]	PN
R7015R-B1	15	15	6
R7020R-B1	20	32	6
R7025R-B2	25	26	6
R7032R-B3	32	32	6
R7040R-B3	40	31	6
R7050R-B3	50	49	6

Technical data

Functional data	Fluid	Water, water with glycol up to max. 50% vol.
	Fluid temperature	-10...100°C [14...212°F]
	Fluid temperature note	At a fluid temperature of -10...2°C, a spindle heater or a valve neck extension is recommended. The allowed fluid temperature can be limited, depending on the type of actuator. Limitations can be found in the respective data sheets of the actuators.
	Close-off pressure Δps	600 kPa
	Differential pressure Δpmax	100 kPa
	Flow	Bypass B – AB: approx. 50% of Kvs value
	Leakage rate	Port A – AB: air-bubble tight, leakage rate A (EN 12266-1); Bypass B – AB: Leakage class I (EN 1349 and EN 60534-4) max. 1% of the Kvs value
	Angle of rotation	90°
	Pipe connection	Flange according to EN 1092-1/4
	Installation orientation	upright to horizontal (in relation to the spindle)
	Servicing	maintenance-free
Materials	Valve body	nickel-plated brass body
	Body finish	nickel-plated
	Closing element	chrome-plated brass
	Spindle	nickel-plated brass
	Spindle seal	EPDM O-ring

Technical data

Materials	Seat	PTFE, O-ring EPDM (DN 15, 25, 32, 40, 50) PTFE, O-ring Viton (DN 20)
	Flange	Galvanized steel (DN 15, 20) Aluminium (DN 25, 32, 40, 50)
	Flange sealing surface	Nickel-plated brass

Safety notes

- The valve has been designed for use in stationary heating, ventilation and air-conditioning systems and must not be used outside the specified field of application, especially in aircraft or in any other airborne means of transport.
- Only authorised specialists may carry out installation. All applicable legal or institutional installation regulations must be complied with during installation.
- The valve does not contain any parts that can be replaced or repaired by the user.
- The valve may not be disposed of as household refuse. All locally valid regulations and requirements must be observed.
- When determining the flow rate characteristic of controlled devices, the recognised directives must be observed.

Product features

Operating mode

The open/close ball valve is adjusted by a rotary actuator. The rotary actuator is controlled by an open/close signal. Open the ball valve counterclockwise and close it clockwise.

Accessories

Electrical accessories

Description	Type
Stem heater for ball valve DN 15...50, AC/DC 24 V, 20 W	ZR24-2

Mechanical accessories

Description	Type
Valve neck extension for ball valve DN 15...50	ZR-EXT-01

Installation notes

Permissible installation orientation

The ball valve can be installed upright to horizontal. The ball valve may not be installed in a hanging position, i.e. with the spindle pointing downwards.

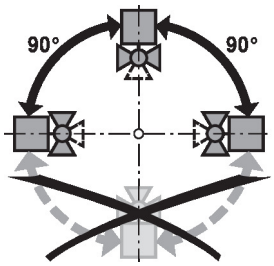

Water quality requirements

The water quality requirements specified in VDI 2035 must be adhered to.

Belimo valves are regulating devices. For the valves to function correctly in the long term, they must be kept free from particle debris (e.g. welding beads during installation work). The installation of a suitable strainer is recommended.

Installation notes

Servicing

Ball valves and rotary actuators are maintenance-free.

Before any service work on the control element is carried out, it is essential to isolate the rotary actuator from the power supply (by unplugging the electrical cable if necessary). Any pumps in the part of the piping system concerned must also be switched off and the appropriate slide valves closed (allow all components to cool down first if necessary and always reduce the system pressure to ambient pressure level).

The system must not be returned to service until the ball valve and the rotary actuator have been correctly reassembled in accordance with the instructions and the pipeline has been refilled by professionally trained personnel.

Flow direction

The direction of flow, specified by an arrow on the housing, is to be complied with, since otherwise the ball valve could become damaged. Please ensure that the ball is in the correct position (marking on the spindle).

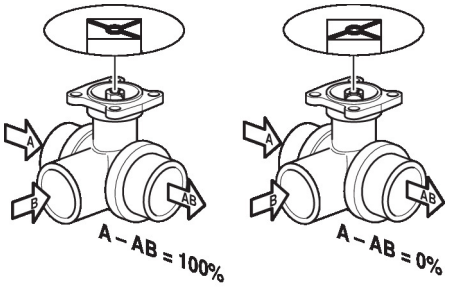

Dimensions

Dimensional drawings

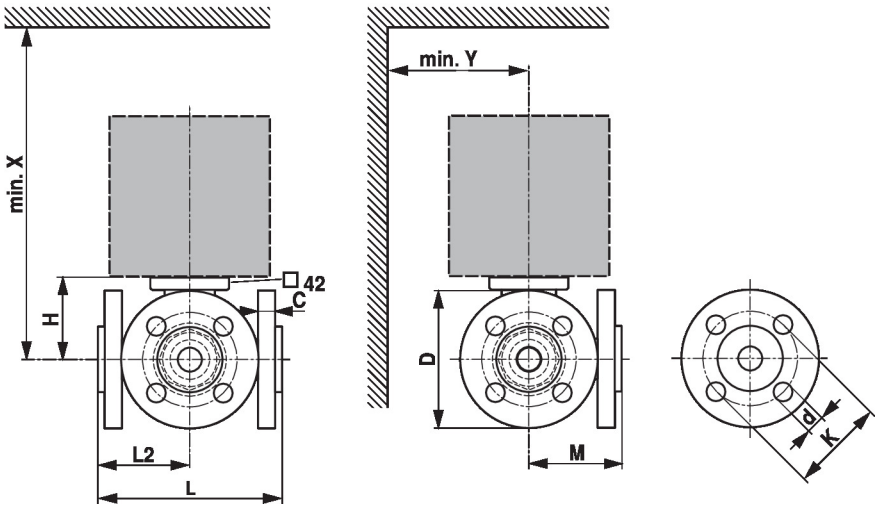

X/Y: Minimum distance with respect to the valve centre.
The actuator dimensions can be found on the respective actuator data sheet.

Type	DN	L [mm]	L2 [mm]	M [mm]	H [mm]	C [mm]	D [mm]	d [mm]	K [mm]	X [mm]	Y [mm]	kg
R7015R-B1	15	101	53	73	44	10	80	4 x 11	55	230	90	1.6
R7020R-B1	20	112	58	80	46	10	90	4 x 11	65	235	95	2.2
R7025R-B2	25	132	67	92	46	14	100	4 x 11	75	235	100	2.0
R7032R-B3	32	143	74	102.5	50.5	12	120	4 x 14	90	240	105	2.8
R7040R-B3	40	151	76	105	50.5	12	130	4 x 14	100	240	110	3.6
R7050R-B3	50	165	85	121	56	12	140	4 x 14	110	245	115	4.8

Further documentation

- The complete product range for water applications
- Data sheets for actuators
- Installation instructions for actuators and/or ball valves
- General notes for project planning