Auxiliary switch for damper actuators and rotary actuators

- Two switches (SPDT)
- Adjustable switching points

Picture may differ from product

Technical data

Electrical data	Auxiliary switch	2x SPDT, 0...100%, adjustable in 10% steps
	Switching capacity auxiliary switch	6 A (3 A inductive), AC 250 V
	Switching points auxiliary switch	Adjustable across the entire range of rotation 0...10 of the actuator. Presetting with scale possible.
	Electrical connection	Cable
	Connection auxiliary switch	Cable 3 m, 6x 0.75 mm² halogen-free
Safety data	Protection class IEC/EN	II, reinforced insulation
	Degree of protection IEC/EN	IP54
	EMC	CE according to 2014/30/EU
	Low voltage directive	CE according to 2014/35/EU
	Certification IEC/EN	IEC/EN 60730-1
	Type of action	Type 1.B
	Rated impulse voltage auxiliary switch	4 kV
	Pollution degree	3
	Ambient humidity	Max. 95% RH, non-condensing
	Ambient temperature	-30...50°C [-22...122°F]
	Storage temperature	-40...80°C [-40...176°F]
	Servicing	maintenance-free
Weight	Weight	0.41 kg

Safety notes

- The device must not be used outside the specified field of application, especially not in aircraft or in any other airborne means of transport.
- Outdoor application: only possible in case that no (sea) water, snow, ice, insolation or aggressive gases interfere directly with the device and that it is ensured that the ambient conditions remain within the thresholds according to the data sheet at any time.
- Only authorised specialists may carry out installation. All applicable legal or institutional installation regulations must be complied with during installation.
- The device may only be opened at the manufacturer's site. It does not contain any parts that can be replaced or repaired by the user.
- Cables must not be removed from the device.
- The device contains electrical and electronic components and must not be disposed of as household refuse. All locally valid regulations and requirements must be observed.

Product features

Operating mode Switching points can be freely selected with an adjustment dial. The current switch position can be read off at any time.

Product features

Application The auxiliary switch unit is used for signaling the position or for exercising switching functions in any given angle setting.

Accessories

Mechanical accessories

Description	Type
Bracket for SN2-C7 for BFN/BFL, BEN/BEE, BFA	ZSN-B
Bracket for SN2-C7 for BF	ZSN-BF

Electrical installation

Wire colours:
S1 = white
S2 = white
S3 = white
S4 = white
S5 = white
S6 = white

Wiring diagrams

Auxiliary switch

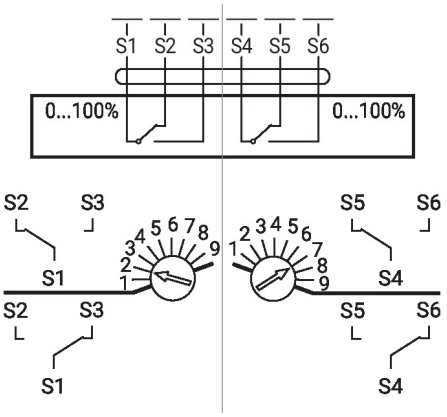

Operating controls and indicators

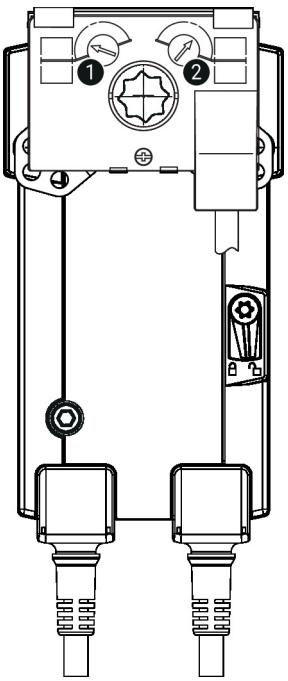

Auxiliary switch settings

⚠ **Note:** Perform settings on the auxiliary switch only in deenergised state.

❶ **Auxiliary switch - 1**
Turn rotary knob until the arrow points to the designated position (e.g. 2 = 20%, 7 = 70%).
The arrow direction always indicates the switching position (S1-S2 or S1-S3).
The switching position can be checked with a continuity tester on the cable of the auxiliary switch.

❷ **Auxiliary switch - 2**
Same procedure as for auxiliary switch 1.

Dimensions

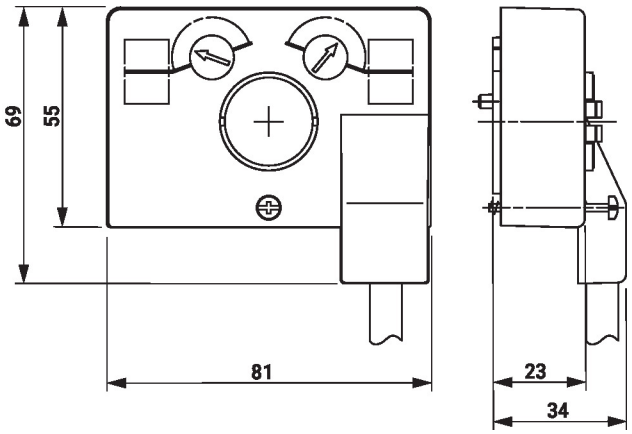

Type	Weight
SN2-C7/300	0.41 kg