RetroFIT+ rotary actuator for rotary valves and butterfly valves

- Torque motor 20 Nm
- Nominal voltage AC 24...240 V / DC 24...125 V
- Control Open/close

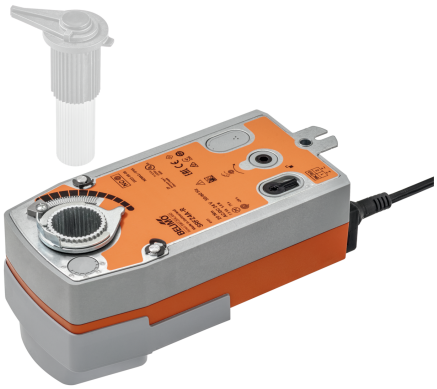

Picture may differ from product

Technical data

Electrical data	Nominal voltage	AC 24...240 V / DC 24...125 V
	Nominal voltage frequency	50/60 Hz
	Nominal voltage range	AC 19.2...264 V / DC 21.6...137.5 V
	Power consumption in operation	7 W
	Power consumption in rest position	3 W
	Power consumption for wire sizing	18 VA
	Connection supply / control	Cable 1 m, 2x 0.75 mm^2
	Parallel operation	Yes (note the performance data)
Functional data	Torque motor	20 Nm
	Torque fail-safe	20 Nm
	Direction of motion fail-safe	selectable: Deenergised NC, valve closed (A – AB = 0%) Deenergised NO, valve open (A – AB = 100%)
	Manual override	by means of hand crank and locking switch
	Running time motor	75 s / 90°
	Running time fail-safe	<20 s @ -20...50°C, <60 s @ -30°C
	Sound power level, motor	45 dB(A)
	Position indication	Mechanical
	Service life	Min. 60'000 fail-safe positions
Safety data	Protection class IEC/EN	II, reinforced insulation
	Protection class UL	II, reinforced insulation
	Degree of protection IEC/EN	IP54
	Degree of protection NEMA/UL	NEMA 2
	Housing	UL Enclosure Type 2
	EMC	CE according to 2014/30/EU
	Low voltage directive	CE according to 2014/35/EU
	Certification IEC/EN	IEC/EN 60730-1 and IEC/EN 60730-2-14
	UL Approval	cULus according to UL60730-1A, UL60730-2-14 and CAN/CSA E60730-1 The UL marking on the actuator depends on the production site, the device is UL-compliant in any case
	Type of action	Type 1.AA
	Rated impulse voltage supply / control	4 kV
	Pollution degree	3

Technical data

Safety data	Ambient humidity	Max. 95% RH, non-condensing
	Ambient temperature	0...50°C [32...122°F]
	Storage temperature	-40...80°C [-40...176°F]
	Servicing	maintenance-free
Mechanical data	Connection flange	F03/F04/F05
Weight	Weight	2.2 kg

Safety notes

- This device has been designed for use in stationary heating, ventilation and air-conditioning systems and must not be used outside the specified field of application, especially in aircraft or in any other airborne means of transport.
- Outdoor application: only possible in case that no (sea) water, snow, ice, insolation or aggressive gases interfere directly with the device and that it is ensured that the ambient conditions remain within the thresholds according to the data sheet at any time.
- Caution: Mains voltage!
- Only authorised specialists may carry out installation. All applicable legal or institutional installation regulations must be complied with during installation.
- The device may only be opened at the manufacturer's site. It does not contain any parts that can be replaced or repaired by the user.
- Cables must not be removed from the device.
- The device contains electrical and electronic components and must not be disposed of as household refuse. All locally valid regulations and requirements must be observed.

Product features

Operating mode

The actuator is equipped with a universal power supply module that can utilise supply voltages of AC 24...240 V and DC 24...125V.

The actuator moves the valve to the operating position at the same time as tensioning the return spring. The valve is turned back to the fail-safe position by spring force when the supply voltage is interrupted.

Application

For rotary valves and butterfly valves with the following mechanical specifications:

– ISO 5211: F03, F04, F05 (hole circle diameter on the flange for mounting the fitting)

– ISO 5211: quadratic, flat head or wedge-shaped spindle head geometry

Tappet shaft

The form fit adapter is not included in the scope of delivery (see «Accessories»).

ZSFV-..

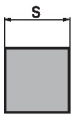

Type	s [mm]
ZSFV-08	8
ZSFV-09	9
ZSFV-10	10
ZSFV-11	11
ZSFV-12	12
ZSFV-14	14

ZSFF-..

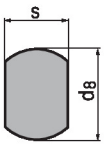

Type	s [mm]	d_8 [mm]
ZSFF-08	8	17
ZSFF-09	9	12
ZSFF-10	10	17
ZSFF-11	11	14
ZSFF-14	14	18

ZSFK-..

Type	d_7 [mm]
ZSFK-12	12
ZSFK-14	14

Simple direct mounting

Simple direct mounting on the rotary valve or butterfly valve with mounting flange. The mounting orientation in relation to the fitting can be selected in 90° steps.

Manual override

By using the hand crank the valve can be operated manually and engaged with the locking switch at any position. Unlocking is carried out manually or automatically by applying the operating voltage.

Product features

Adjustable angle of rotation Adjustable angle of rotation with mechanical end stops.

High functional reliability The actuator is overload protected, requires no limit switches and automatically stops when the end stop is reached.

Accessories

Mechanical accessories

Description	Type
Form fit adapter square 8x8x55 mm (LxWxH)	ZSFV-08
Form fit adapter square 9x9x55 mm (LxWxH)	ZSFV-09
Form fit adapter square 10x10x55 mm (LxWxH)	ZSFV-10
Form fit adapter square 11x11x55 mm (LxWxH)	ZSFV-11
Form fit adapter square 12x12x55 mm (LxWxH)	ZSFV-12
Form fit adapter square 14x14x55 mm (LxWxH)	ZSFV-14
Form fit adapter flat head 8xø17x55 mm (WxøxH)	ZSFF-08
Form fit adapter flat head 9xø12x55 mm (WxøxH)	ZSFF-09
Form fit adapter flat head 10xø17x55 mm (WxøxH)	ZSFF-10
Form fit adapter flat head 11xø14x55 mm (WxøxH)	ZSFF-11
Form fit adapter flat head 14xø18x55 mm (WxøxH)	ZSFF-14
Form fit adapter wedge groove ø12x4x55 mm (øxWxH)	ZSFK-12
Form fit adapter wedge groove ø14x5x55 mm (øxWxH)	ZSFK-14

Electrical installation

Caution: Mains voltage!

Parallel connection of other actuators possible. Observe the performance data.

Wire colours:
1 = blue
2 = brown

AC 24...240 V / DC 24...125 V, open/close

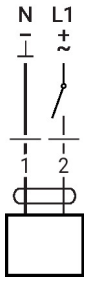

Dimensions

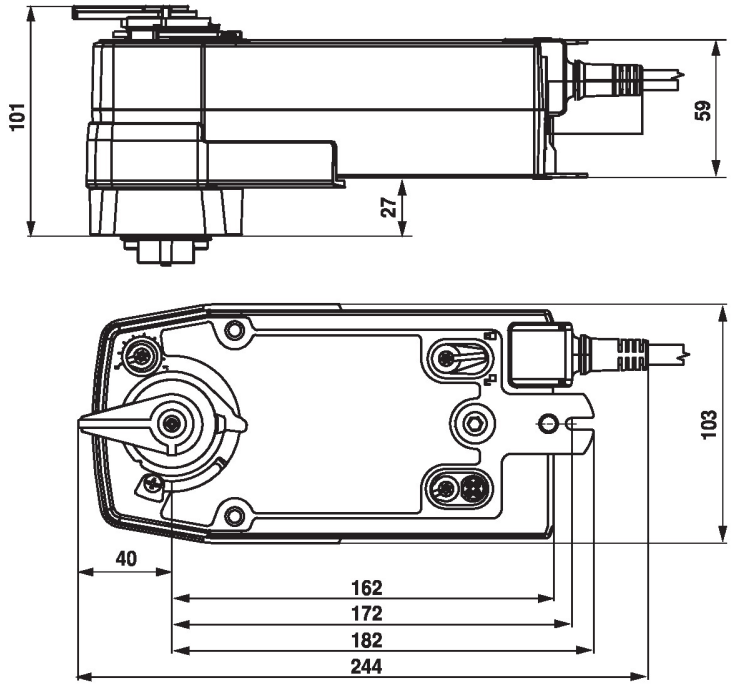

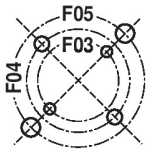

F03	∅ 36	2 x M5
F04	∅ 42	2 x M5
F05	∅ 50	2 x M6

Further documentation

- General notes for project planning