Characterised control valve with sensor-operated flow control, 2-way, Flange, PN 25 (EPIV)

- Nominal voltage AC/DC 24 V
- Control modulating, communicative, hybrid
- For closed water systems
- For modulating control of air-handling and heating systems on the water side
- Communication via BACnet MS/TP, Modbus RTU, Belimo-MP-Bus or conventional control
- Conversion of active sensor signals and switching contacts
- Measurement of the fluid temperature
- Glycol monitoring

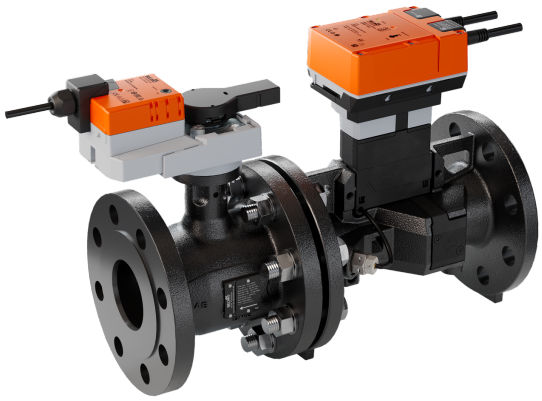

Picture may differ from product

## Type Overview

| Type | DN | V'nom [l/s] | V'nom [l/min] | V'nom [m³/h] | Kvs theor. [m³/h] | PN |
|---|---|---|---|---|---|---|
| EP065F2-25+BAC | 65 | 8.3 | 500 | 30 | 52.2 | 25 |
| EP080F2-25+BAC | 80 | 11.7 | 700 | 42 | 72.3 | 25 |
| EP100F2-25+BAC | 100 | 20.8 | 1250 | 75 | 142.8 | 25 |
| EP125F2-25+BAC | 125 | 33.3 | 2000 | 120 | 232.9 | 25 |
| EP150F2-25+BAC | 150 | 50.0 | 3000 | 180 | 317.6 | 25 |

Kvs theor.: theoretical Kvs value for pressure drop calculation

## Technical data

| | | |
|---|---|---|
| **Electrical data** | Nominal voltage | AC/DC 24 V |
| | Nominal voltage frequency | 50/60 Hz |
| | Nominal voltage range | AC 19.2...28.8 V / DC 21.6...28.8 V |
| | Power consumption in operation | 3.3 W (DN 65...80)<br>5.1 W (DN 100...150) |
| | Power consumption in rest position | 2.4 W (DN 65...80)<br>2.6 W (DN 100...150) |
| | Power consumption for wire sizing | 6.2 VA (DN 65...80)<br>9.2 VA (DN 100...150) |
| | Connection supply / control | Cable 1 m, 6x 0.75 mm² |
| | Cable length | 1 m |
| **Data bus communication** | Communicative control | BACnet MS/TP<br>Modbus RTU<br>MP-Bus |
| | Number of nodes | BACnet / Modbus see interface description<br>MP-Bus max. 8 |
| | MP-Bus compatibility mode | If the device is used as a EP..R-(K)MP replacement in an existing MP-Bus system, the unit can be set to the MP compatibility mode. The existing MP client will recognise the device as former EPIV device.<br>The compatibility mode shall not be used for new projects. |
| **Functional data** | Operating range Y | 2...10 V |
| | Operating range Y variable | 0.5...10 V |
| | Position feedback U | 2...10 V |
| | Position feedback U note | Max. 1 mA |
| | Position feedback U variable | 0...10 V<br>0.5...10 V |
| | Sound power level motor | 45 dB(A) |

## Technical data

| | | |
|---|---|---|
| **Functional data** | V'max adjustable | 25...100% of V'nom |
| | Control accuracy | ±5% (of 25...100% V'nom) |
| | Control accuracy note | ±10% (of 25...100% V'nom) @ Glycol 0...60% vol. |
| | Min. controllable flow | 1% of V'nom |
| | Configuration | via NFC, Belimo Assistant 2 |
| | Fluid | Water, water with glycol up to max. 60% vol. |
| | Fluid temperature | -10...120°C [14...248°F] (DN 65...125)<br>-10...110°C [14...230°F] (DN 150) |
| | Fluid temperature note | At a fluid temperature of -10...2°C, a valve neck extension is recommended.<br>The allowed fluid temperature can be limited, depending on the type of actuator. Limitations can be found in the respective data sheets of the actuators. |
| | Close-off pressure | Δps 690 kPa |
| | Differential pressure | Δpmax 350 kPa |
| | Differential pressure note | 200 kPa for low-noise operation |
| | Flow characteristic | equal percentage (VDI/VDE 2173), optimised in the opening range |
| | Flow characteristic note | switchable to linear (VDI/VDE 2173) |
| | Leakage rate | air-bubble tight, leakage rate A (EN 12266-1) |
| | Pipe connection | Flange<br>according to EN 1092-2 |
| | Installation orientation | upright to horizontal (in relation to the spindle) |
| | Servicing | maintenance-free |
| | Manual override | with push-button, can be locked |
| **Measuring data** | Measured values | Flow<br>Fluid temperature in valve unit |
| | Temperature sensor | Pt1000 - EN 60751, 2-wire technology, inseparably connected<br>integrated in flow sensor |
| **Temperature measurement** | Measuring accuracy absolute temperature | ±0.6°C @ 10°C [±1.1°F @ 50°F] (Pt1000 EN60751 Class C)<br>±0.75°C @ 60°C [±1.35°F @ 140°F] (Pt1000 EN60751 Class C) |
| **Flow measurement** | Measuring principle | Ultrasonic flow measurement |
| | Measuring accuracy flow | ±2%, according to class 2 EN 1434, glycol 0% vol. |
| | Measuring accuracy flow note | @ 5...120°C<br>Inlet section ≥5x DN |
| | Min. flow measurement | 0.2% of V'nom |
| **Glycol monitoring** | Measurement display glycol | 0...60% |
| | Measuring accuracy glycol monitoring | ±4% |
| **Safety data** | Protection class IEC/EN | III, Protective Extra-Low Voltage (PELV) |
| | Degree of protection IEC/EN | IP54 |
| | Pressure equipment directive | CE according to 2014/68/EU |
| | EMC | CE according to 2014/30/EU |
| | Certification IEC/EN | IEC/EN 60730-1:11 and IEC/EN 60730-2-15:10 |
| | Quality Standard | ISO 9001 |
| | Type of action | Type 1 |

## Technical data

| | | |
|---|---|---|
| **Safety data** | Rated impulse voltage supply / control | 0.8 kV |
| | Pollution degree | 3 |
| | Ambient humidity | Max. 95% RH, non-condensing |
| | Ambient temperature | -30...50°C [-22...122°F] |
| | Storage temperature | -40...80°C [-40...176°F] |
| **Materials** | Valve body | EN-GJS-400-18-LT (GGG 40.3) |
| | Body finish | with protective paint |
| | Fluid wetted parts | EN-GJS-400-18-LT (GGG 40.3), with protective paint, stainless steel, PEEK, EPDM |
| | Closing element | Stainless steel AISI 316 |
| | Spindle | Stainless steel AISI 304 |
| | Spindle seal | EPDM |

## Safety notes

- This device has been designed for use in stationary heating, ventilation and air-conditioning systems and must not be used outside the specified field of application, especially in aircraft or in any other airborne means of transport.
- Outdoor application: Only possible if no (sea) water, snow, ice, sunlight or aggressive gases act directly on the device and if it is ensured that the ambient conditions remain within the limit values specified in the data sheet at all times.
- Only authorised specialists may carry out installation. All applicable legal or institutional installation regulations must be complied with during installation.
- The device contains electrical and electronic components and must not be disposed of as household refuse. All locally valid regulations and requirements must be observed.

## Product features

**Operating mode**

The HVAC performance device is comprised of three components: characterised control valve (CCV), measuring pipe with flow sensor and the actuator itself. The adjusted maximum flow (V'max) is assigned to the maximum control signal (typically 100%). The HVAC performance device can be controlled via communicative signals. The fluid is detected by the sensor in the measuring pipe and is applied as the flow value. The measured value is balanced with the setpoint. The actuator corrects the deviation by changing the valve position. The angle of rotation α varies according to the differential pressure through the control element (see flow curves).

**Calibration certificate**

There is a calibration certificate available in the Belimo Cloud for each device. If needed, it can be downloaded as a PDF through Belimo Assistant 2.

**Flow rate curves**

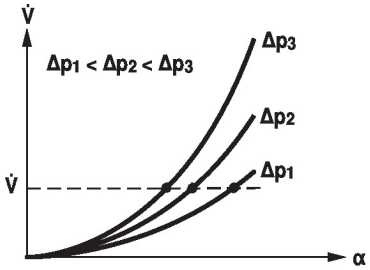

## Product features

**Control characteristics**

The fluid velocity is measured in the measuring component (sensor electronics) and converted to a flow rate signal.

The control signal Y corresponds to the power Q via the exchanger, the flow is controlled in the EPIV. The control signal Y is converted into an equal-percentage characteristic curve and provided with the V'max value as the new reference variable w. The momentary control deviation forms the control signal Y1 for the actuator.

The specially configured control parameters in connection with the precise flow sensor ensure a stable quality of control. They are, however, not suitable for rapid control processes, such as for domestic water control. U5 displays the measured flow as voltage (factory setting).

Configuring V'max with Belimo Assistant 2:

U5 refers to the respective V'nom, i.e. if V'max is e.g. 50% of V'nom, then Y = 10 V, U5 = 5 V.

As an alternative, U5 can be used for displaying the valve opening angle (position) or the fluid temperature.

1. Standard equal percentage V'max = V'nom / 2. effect V'max < V'nom

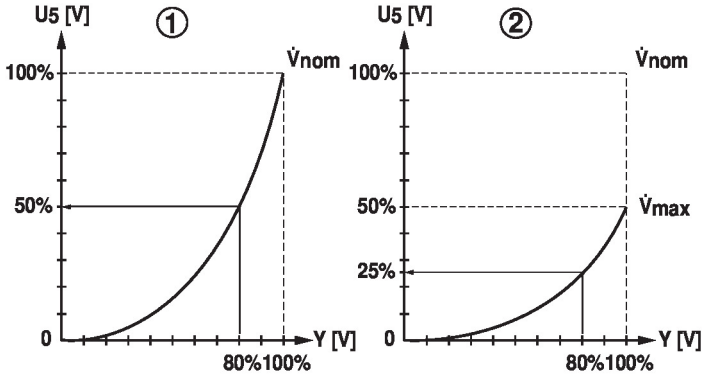


Flow control

V'nom is the maximum possible flow.

V'max is the maximum flow rate which has been set with the highest control signal DDC. V'max can be set between 25% and 100% of V'nom.

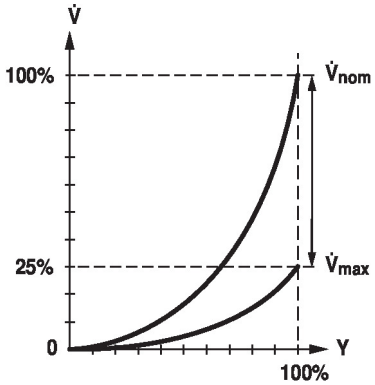


Position control

In this setting, the control signal is assigned to the opening angle of the valve (e.g. Y = 10 V α = 90°).

The result is a pressure-dependent operation similar to that of a conventional valve.

Running time of the motor in this mode is 90 s for 90°.

**Fluid temperature measurement**

By means of the temperature sensor integrated in the flow sensor, the fluid temperature is permanently measured. The measured value can be read via the bus system or the analogue feedback signal U. The current measured value is also displayed in Belimo Assistant 2.

## Product features

**Creep flow suppression**

Given the very low flow speed in the opening point, this can no longer be measured by the sensor within the required tolerance. This range is overridden electronically.

Opening valve

The valve remains closed until the flow required by the control signal DDC corresponds to 1% of V'nom. The control along the flow characteristic is active after this value has been exceeded.

Closing valve

The control along the flow characteristic is active up to the required flow rate of 1% of V'nom. Once the level falls below this value, the flow rate is maintained at 1% of V'nom. If the level falls below the flow rate of 0.5% of V'nom required by the control signal DDC, then the valve will close.

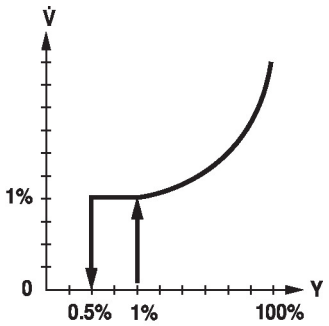


**Converter for sensors**

Connection option for a sensor (active or with switching contact). In this way, the analogue sensor signal can be easily digitised and transferred to the bus systems BACnet, Modbus or MP-Bus.

**Control signal inversion**

This can be inverted in cases of control with an analogue control signal. The inversion causes the reversal of the standard behaviour, i.e. at a control signal of 0%, regulation is to V'max, and the valve is closed at a control signal of 100%.

**Hydronic balancing**

With the Belimo tools, the maximum flow rate (equivalent to 100% requirement) can be adjusted on-site, simply and reliably, in a few steps. If the device is integrated in the management system, then the balancing can be handled directly by the management system.

**Combination analogue - communicative (hybrid mode)**

With conventional control by means of an analogue control signal DDC, BACnet, Modbus or MP-Bus can be used for the communicative position feedback.

**Patented glycol compensation**

Glycol changes the viscosity of the heat transfer fluid and as a result affects the measured volumetric flow. Without glycol compensation, volumetric flow measurements can show errors of as much as 30 percent. The patented automatic glycol compensation significantly reduces the degree of measurement error.

Selection of the fluid used:

– Water
– Propylene glycol
– Ethylene glycol
– Antifrogen L
– Antifrogen N
– DowCal 200
– DowCal 100

Determining the glycol concentration requires recurring temperature changes of min. 2 K within the flow sensor during operation. Installing the flow sensor in the temperature-variable part of the system is recommended to ensure these temperature changes.

**Error readout with analogue feedback signal**

If the sensor cannot measure the flow due to a sensor error, this is indicated by 0.3 V at the position feedback U. This is only the case if the analogue position feedback U is set to flow and the lower value of the signal range is 0.5 V or more.

**Manual override**

Manual override with push-button possible (the gear train is disengaged for as long as the button is pressed or remains locked).

## Product features

**High functional safety** The actuator is overload protected, requires no limit switches and automatically stops when the end stop is reached.

## Accessories

| Tools | Description | Type |
|---|---|---|
| | Service tool for wired and wireless setup, on-site operation and troubleshooting. | Belimo Assistant 2 |
| | Belimo Assistant Link Bluetooth and USB to NFC and MP-Bus converter for configurable and communicative devices | LINK.10 |

| Electrical accessories | Description | Type |
|---|---|---|
| | Stem heater flange F05 (30 W) | ZR24-F05 |

| Mechanical accessories | Description | Type |
|---|---|---|
| | Valve neck extension for ball valve DN 65...150, for butterfly valves up to DN 80 | ZR-EXT-F05 |

## Electrical installation

**Supply from isolating transformer.**

**Parallel connection of other actuators possible. Observe the performance data.**

**The wiring of the line for BACnet MS/TP / Modbus RTU is to be carried out in accordance with applicable RS-485 regulations.**

**Modbus / BACnet: Supply and communication are not galvanically isolated. COM and ground of the devices must be connected to each other.**

**Sensor connection: An additional sensor can optionally be connected to the flow sensor. This can be an active sensor with output DC 0...10 V (max. DC 0...32 V with resolution 30 mV) or a switching contact (switching current min. 16 mA @ 24 V). Thus the analogue signal of the sensor can be easily digitised with the flow sensor and transferred to the corresponding bus system.**

**Analogue output: An analogue output (wire 5) is available on the flow sensor. It can be selected as 0...10 V, 0.5...10 V, 2...10 V or user defined. For example, the flow rate or the temperature of the temperature sensor (Pt1000 - EN 60751, 2-wire technology) can be output as an analogue value.**

**Wire colours:**
1 = black
2 = red
3 = white
5 = orange
6 = pink
7 = grey

**Functions:**
C1 = D- (wire 6)
C2 = D+ (wire 7)

AC/DC 24 V, modulating

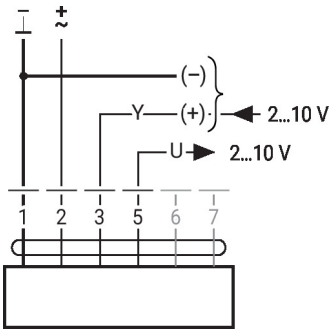


Modbus RTU / BACnet MS/TP with analogue setpoint (hybrid operation)

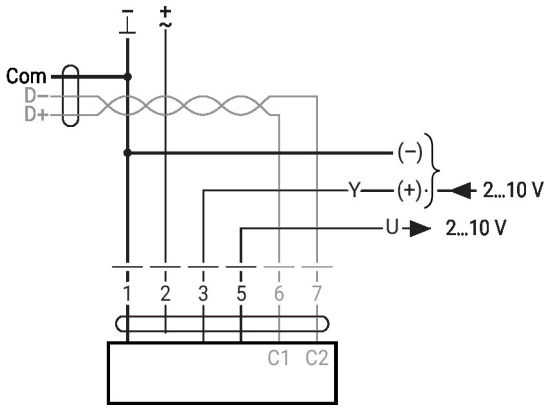

## Electrical installation

BACnet MS/TP / Modbus RTU

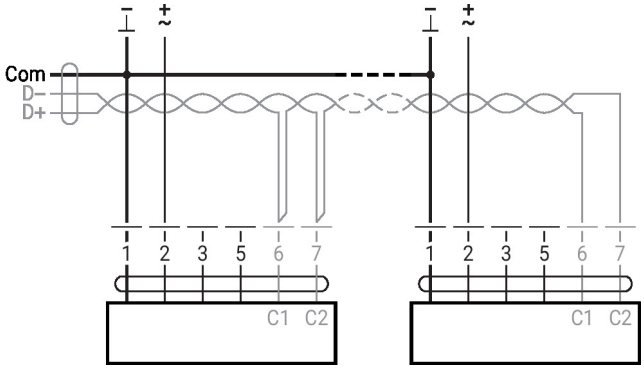


MP-Bus

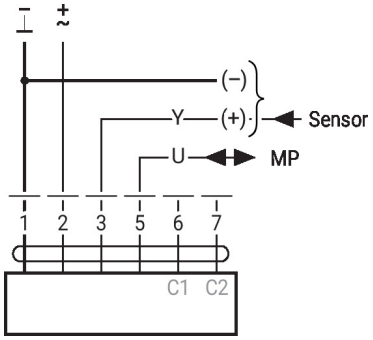


### Converter for sensors

Connection with switching contact, e.g. differential pressure switch

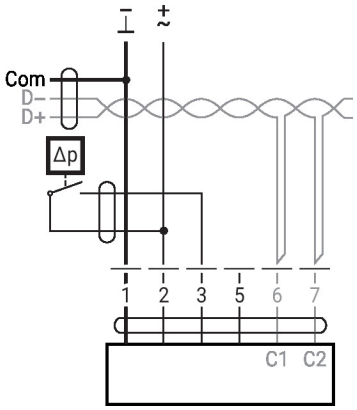


Switching contact requirements:
The switching contact must be able to switch a current of 16 mA at 24 V accurately.

Connection with active sensor, e.g. 0...10 V @ 0...50°C

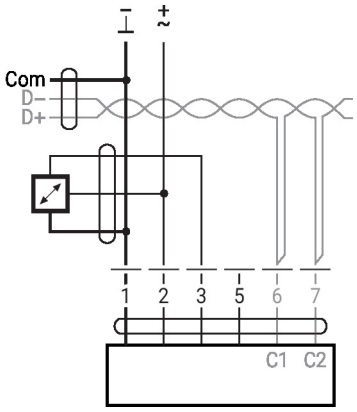


Possible voltage range: 0...32 V
Resolution 30 mV

## Further electrical installations

### Functions with specific parameters (configuration necessary)

Override control and limiting with AC 24 V with relay contacts (with conventional control or hybrid mode)

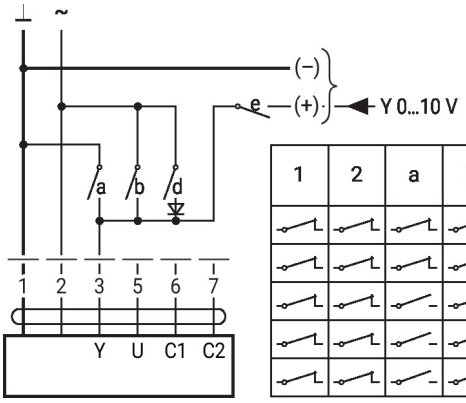


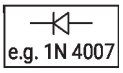


| 1 | 2 | a | b | d | e | | Inv. |
|---|---|---|---|---|---|---|---|
| | | | | | | Close[1] | Open[1] |
| | | | | | | $V'_{min}$ [2] | $V'_{max}$ [2] |
| | | | | | | $V'_{max}$ | $V'_{max}$ |
| | | | | | | Open | Open |
| | | | | | | Y | Y |

1) Position control
2) Flow control
Inv. = control signal inverted

Override control and limiting with DC 24 V with relay contacts (with conventional control or hybrid mode)

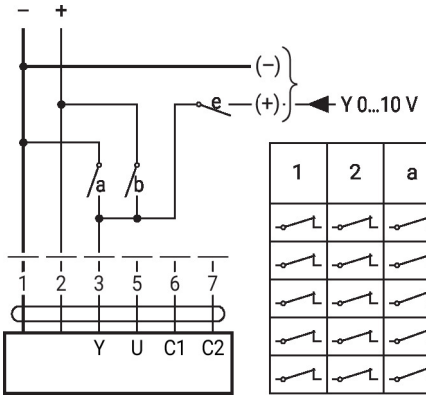


| 1 | 2 | a | b | e | | Inv. |
|---|---|---|---|---|---|---|
| | | | | | Close[1] | Open[1] |
| | | | | | $V'_{min}$ [2] | $V'_{max}$ [2] |
| | | | | | Y | Y |
| | | | | | Open[1] | Open[1] |
| | | | | | $V'_{max}$ [2] | $V'_{max}$ [2] |

1) Position control
2) Flow control
Inv. = control signal inverted

Control 3-point with AC 24 V

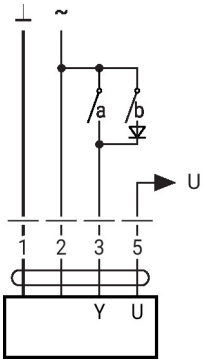


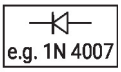


| 1 | 2 | 3 (a) | 3 (b) | |
|---|---|---|---|---|
| | | | | |
| | | | | |
| | | | | stop |
| | | | | |

Position control: 90° = 100 s
Flow control: Vmax = 100 s

## Further electrical installations

### Functions with specific parameters (configuration necessary)

BACnet MS/TP / Modbus RTU with analogue setpoint (hybrid mode)

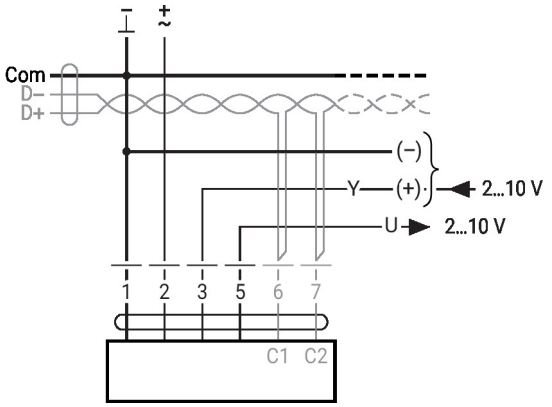


MP-Bus, supply via 3-wire connection

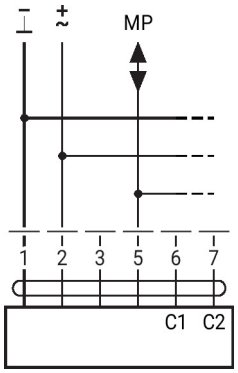


MP-Bus via 2-wire connection, local power supply

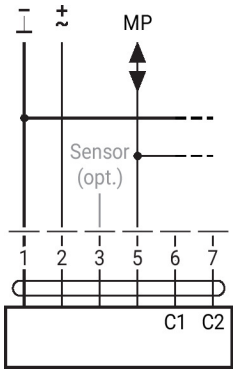


## Operating controls and indicators

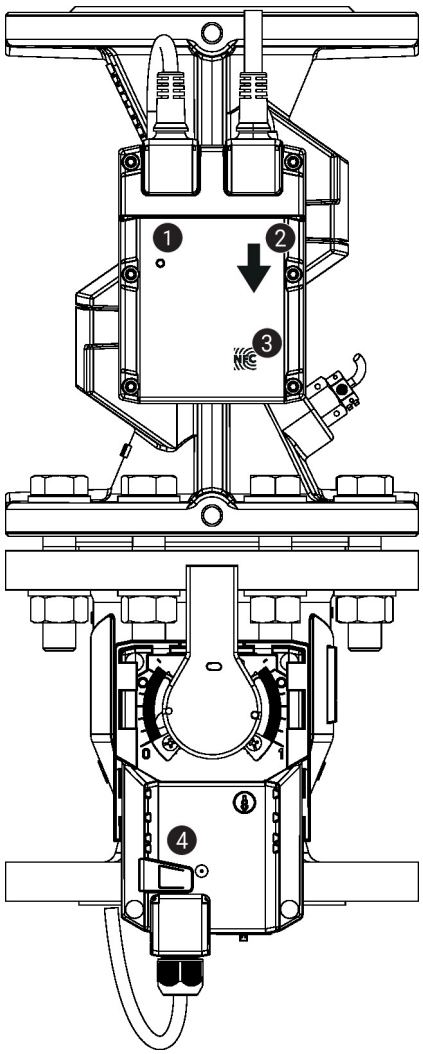


**1 LED display green**

| | |
|---|---|
| On: | Device starting up |
| Off: | No power supply or wiring error |
| Flashing: | In operation (voltage ok) |

**2 Flow direction**

**3 NFC interface**

**4 Manual override button**

| | |
|---|---|
| Press button: | Gear train disengages, motor stops, manual override possible |
| Release button: | Gear train engages, standard mode. Device performs synchronisation. |

## Installation notes

**Permissible installation orientation**

The ball valve can be installed upright to horizontal. The ball valve may not be installed in a hanging position, i.e. with the spindle pointing downwards.

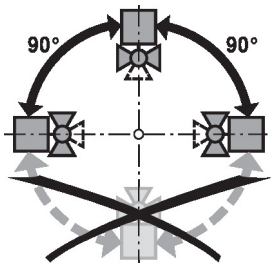


**Installation location in return**

Installation in the return is recommended.

**Water quality requirements**

The water quality requirements specified in VDI 2035 must be adhered to.

Belimo valves are regulating devices. For the valves to function correctly in the long term, they must be kept free from particle debris (e.g. welding beads during installation work). The installation of a suitable strainer is recommended.

**Servicing**

Ball valves, rotary actuators and sensors are maintenance-free.

Before any service work on the control element is carried out, it is essential to isolate the rotary actuator from the power supply (by unplugging the electrical cable if necessary). Any pumps in the part of the piping system concerned must also be switched off and the appropriate slide valves closed (allow all components to cool down first if necessary and always reduce the system pressure to ambient pressure level).

The system must not be returned to service until the ball valve and the rotary actuator have been correctly reassembled in accordance with the instructions and the pipeline has been refilled by professionally trained personnel.

**Flow direction**

The direction of flow, specified by an arrow on the housing, is to be complied with, since otherwise the flow rate will be measured incorrectly.

**Inlet section**

A flow calming section or inlet section in the direction of flow must be maintained in front of the flow sensor to achieve the specified measuring accuracy. Its dimensions should be at least 5x DN.

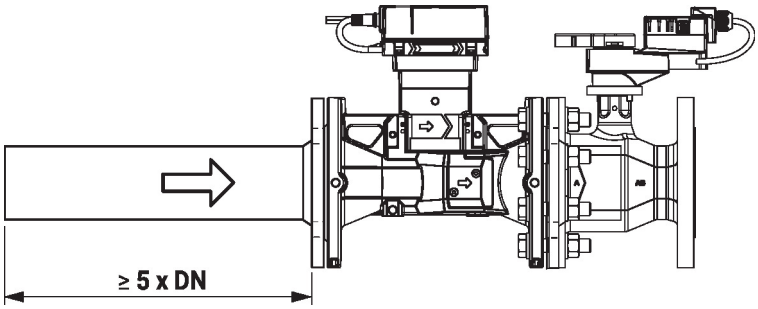


**Split installation**

The valve-actuator combination may be mounted separately from the flow sensor. The direction of flow of both components must be observed.

## General notes

**Valve selection**

The valve is determined using the maximum required flow rate V'max.

A calculation of the Kvs value is not required.

V'max = 25...100% of V'nom

If no hydronic data is available, the same valve DN can be selected as the heat exchanger nominal diameter.

## General notes

**Minimum differential pressure (pressure drop)**

The minimum required differential pressure (pressure drop through the valve) for achieving the desired flow V'max can be calculated with the aid of the theoretical Kvs value (see type overview) and the below-mentioned formula. The calculated value is dependent on the required maximum flow V'max. Higher differential pressures are compensated for automatically by the valve.

Formula

$$\Delta p_{min} = 100 \times \left( \frac{V'_{max}}{K_{vs}\ theor.} \right)^2$$

$\Delta p_{min}$: kPa
$V'_{max}$: m³/h
$K_{vs}$ theor.: m³/h

Example (DN 100 with the desired maximum flow rate = 50% V'nom)

EP100F2-25+BAC
$K_{vs}$ theor. = 142.8 m³/h
$V'_{nom}$ = 1250 l/min
50% x 1250 l/min = 625 l/min = 37.5 m³/h

$$\Delta p_{min} = 100 \times \left( \frac{V'_{max}}{K_{vs}\ theor.} \right)^2 = 100 \times \left( \frac{37.5\ m^3/h}{142.8\ m^3/h} \right)^2 = 6.9\ kPa$$

**Behaviour in case of sensor failure**

In case of a flow sensor error, the EPIV will switch from flow control to position control.

Once the error disappears, the EPIV will switch back to the normal control setting.

## Service

Using Belimo Assistant 2, device parameters can be modified. Belimo Assistant 2 can operate on a smartphone, tablet or PC. The available connection options vary depending on the hardware on which Belimo Assistant 2 is installed.

For more information about Belimo Assistant 2, refer to the Quick Guide – Belimo Assistant 2.

## Service

**Wireless connection**

Belimo devices marked with the NFC logo can be accessed either directly with an NFC-capable smartphone or with a Bluetooth-capable smartphone connected to Belimo Assistant Link.

Requirement:

- NFC- or Bluetooth-capable smartphone or tablet
- Belimo Assistant 2 (Google Play and Apple App Store)

Align the NFC-capable smartphone or Belimo Assistant Link with the device's NFC logo so that both NFC antennas are superposed.

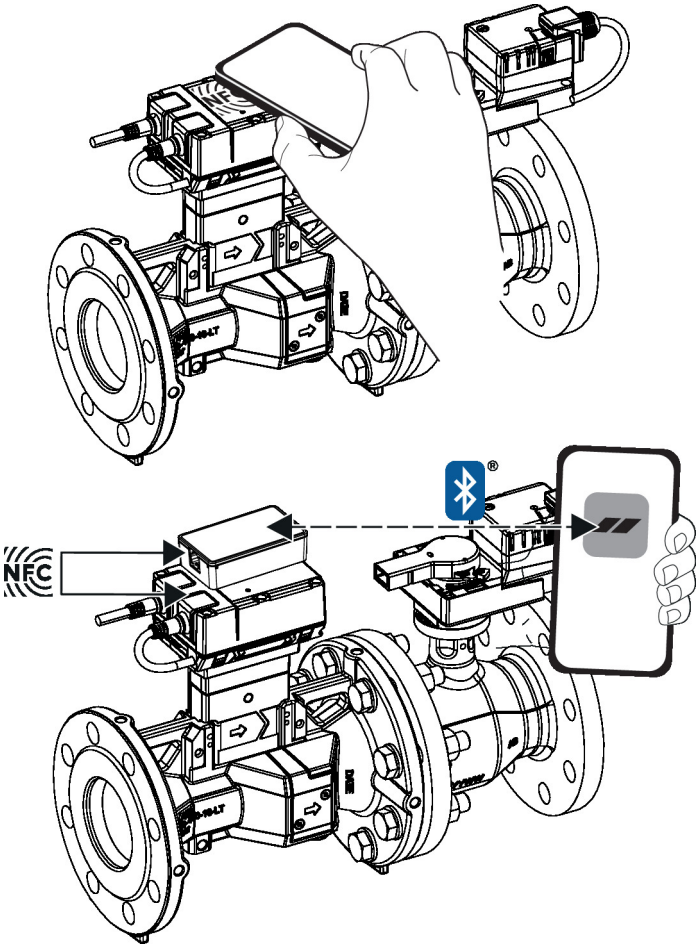


**Wired connection**

Belimo devices can be accessed by connecting Belimo Assistant Link to the USB port on a PC or laptop and to the service socket or MP-Bus wire on the device.

Belimo Assistant 2 acts as MP client. Therefore, no other MP client shall be connected to the device.

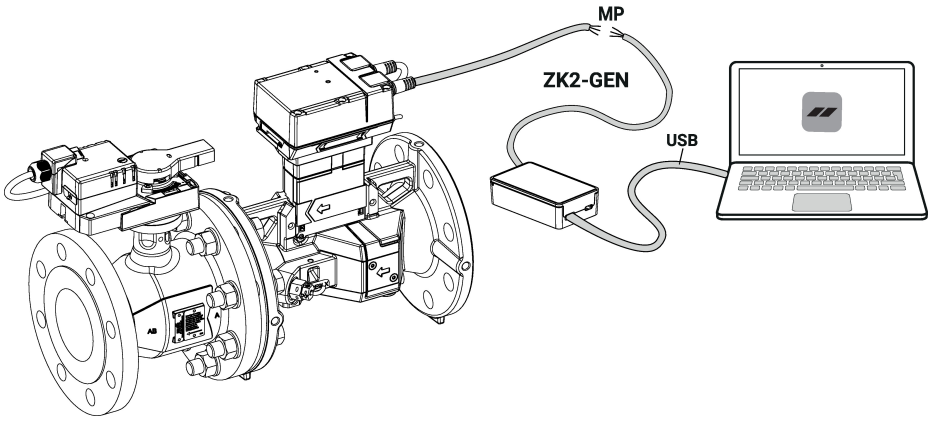

## Dimensions

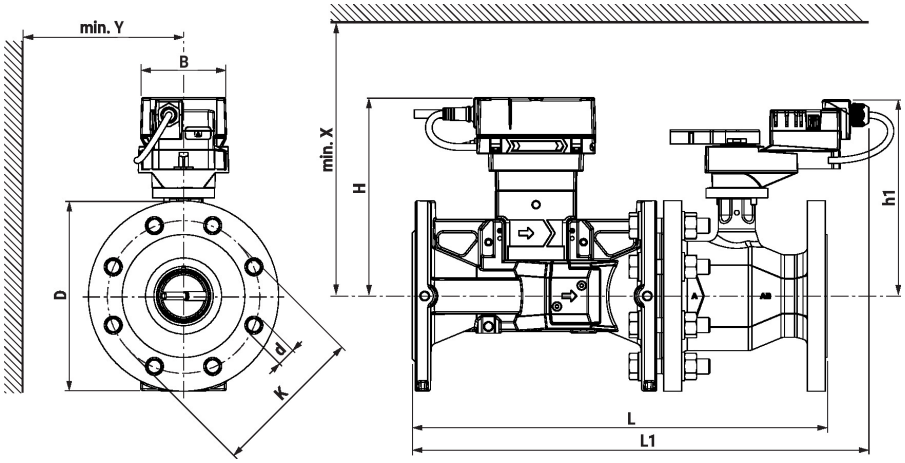


| Type | DN | L [mm] | L1 [mm] | H [mm] | h1 [mm] | D [mm] | d [mm] | K [mm] | B [mm] | X [mm] | Y [mm] | kg |
|---|---|---|---|---|---|---|---|---|---|---|---|---|
| **EP065F2-25+BAC** | 65 | 393 | 451 | 204 | 206 | 185 | 4 x 20 | 145 | 95 | 260 | 150 | 26 |
| **EP080F2-25+BAC** | 80 | 436 | 480 | 209 | 206 | 200 | 8 x 20 | 160 | 95 | 260 | 160 | 31 |
| **EP100F2-25+BAC** | 100 | 480 | 541 | 219 | 231 | 235 | 8 x 20 | 190 | 95 | 280 | 175 | 46 |
| **EP125F2-25+BAC** | 125 | 585 | 618 | 227 | 250 | 270 | 8 x 20 | 220 | 133 | 300 | 190 | 62 |
| **EP150F2-25+BAC** | 150 | 657 | 663 | 236 | 250 | 300 | 8 x 23 | 250 | 133 | 300 | 200 | 78 |

## Further documentation

- Tool connections
- BACnet Interface description
- Modbus Interface description
- Overview MP Cooperation Partners
- MP Glossary
- Introduction to MP-Bus Technology
- General notes for project planning
- Installation instructions for actuators and/or ball valves
- Application information inlet section according to EN 1434
- Quick Guide – Belimo Assistant 2