Modulating linear actuator for adjusting dampers and slide valves in technical building equipment

- Air damper size up to approx. 1 m²
- Actuating force 150 N
- Nominal voltage AC 100...240 V
- Control modulating 2...10 V
- Position feedback 2...10 V
- Length of Stroke Max. 100 mm, fixed setting

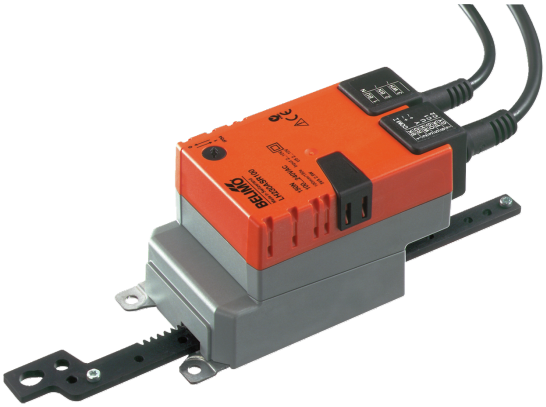

Picture may differ from product

## Technical data

| | | |
|---|---|---|
| **Electrical data** | Nominal voltage | AC 100...240 V |
| | Nominal voltage frequency | 50/60 Hz |
| | Nominal voltage range | AC 85...265 V |
| | Power consumption in operation | 2.5 W |
| | Power consumption in rest position | 1 W |
| | Power consumption for wire sizing | 4.5 VA |
| | Connection supply | Cable 1 m, 2x 0.75 mm² |
| | Connection control | Cable 1 m, 4x 0.75 mm² |
| | Parallel operation | Yes (note the performance data) |
| **Functional data** | Actuating force motor | 150 N |
| | Operating range Y | 2...10 V |
| | Input impedance | 100 kΩ |
| | Position feedback U | 2...10 V |
| | Position feedback U note | Max. 1 mA |
| | Auxiliary supply | DC 24 V ±30%, max. 10 mA |
| | Position accuracy | ±5% |
| | Direction of motion motor | selectable with switch |
| | Direction of motion note | Y = 0 V: with switch 0 (extended) / 1 (retracted) |
| | Manual override | with push-button, can be locked |
| | Stroke | 100 mm |
| | Length of Stroke | Max. 100 mm, fixed setting |
| | Running time motor | 150 s / 100 mm |
| | Sound power level, motor | 45 dB(A) |
| **Safety data** | Protection class IEC/EN | II, reinforced insulation |
| | Protection class UL | II, reinforced insulation |
| | Degree of protection IEC/EN | IP54 |
| | Degree of protection NEMA/UL | NEMA 2 |
| | Housing | UL Enclosure Type 2 |
| | EMC | CE according to 2014/30/EU |
| | Low voltage directive | CE according to 2014/35/EU |
| | Certification IEC/EN | IEC/EN 60730-1 and IEC/EN 60730-2-14 |

## Technical data

| | | |
|---|---|---|
| **Safety data** | UL Approval | cULus according to UL60730-1A, UL60730-2-14 and CAN/CSA E60730-1<br>The UL marking on the actuator depends on the production site, the device is UL-compliant in any case |
| | Hygiene test | According to VDI 6022 Part 1 / SWKI VA 104-01, cleanable and disinfectable, low emission |
| | Type of action | Type 1 |
| | Rated impulse voltage supply | 4 kV |
| | Rated impulse voltage control | 0.8 kV |
| | Pollution degree | 3 |
| | Ambient humidity | Max. 95% RH, non-condensing |
| | Ambient temperature | -30...50°C [-22...122°F] |
| | Storage temperature | -40...80°C [-40...176°F] |
| | Servicing | maintenance-free |
| **Weight** | Weight | 0.60 kg |

## Safety notes

- This device has been designed for use in stationary heating, ventilation and air-conditioning systems and must not be used outside the specified field of application, especially in aircraft or in any other airborne means of transport.
- Outdoor application: only possible in case that no (sea) water, snow, ice, insolation or aggressive gases interfere directly with the device and that it is ensured that the ambient conditions remain within the thresholds according to the data sheet at any time.
- Caution: Mains voltage!
- Only authorised specialists may carry out installation. All applicable legal or institutional installation regulations must be complied with during installation.
- The device may only be opened at the manufacturer's site. It does not contain any parts that can be replaced or repaired by the user.
- Cables must not be removed from the device.
- The gear rod and the mechanical end stops must not be removed.
- The rotary supports and coupling pieces available as accessories must always be used if transverse forces are likely. In addition, the actuator must not be tightly bolted to the application. It must remain movable via the rotary support (refer to «Installation notes»).
- If the actuator is exposed to severely contaminated ambient air, appropriate precautions must be taken on the system side. Excessive deposits of dust, soot etc. can prevent the gear rod from being extended and retracted correctly.
- If not installed horizontally, the maual override button may only be actuated when there is no pressure on the gear rod.
- To calculate the actuating force required for air dampers and slide valves, the specifications supplied by the damper manufacturers concerning the cross- section and the design, as well as the installation situation and the ventilation conditions must be observed.
- If a rotary support and/or coupling piece is used, actuation force losses are to be expected.
- The device contains electrical and electronic components and must not be disposed of as household refuse. All locally valid regulations and requirements must be observed.

## Product features

**Operating mode** The actuator is controlled with a control signal Y (note the operating range) and drives to the position defined by the control signal. Measuring voltage U serves for the electrical display of the damper position 0...100% and as control signal for other actuators.

## Product features

**Simple direct mounting**
The actuator can be directly connected with the application using the enclosed screws. The head of the gear rod is connected to the moving part of the ventilating application individually on the mounting side or with the Z-KS2 coupling piece provided.

**Manual override**
Manual override with push-button possible (the gear train is disengaged for as long as the button is pressed or remains locked).

**High functional reliability**
The actuator is overload protected, requires no limit switches and automatically stops when the end stop is reached.

## Accessories

**Electrical accessories**

| Description | Type |
|---|---|
| Signal converter voltage/current 100 kΩ 4...20 mA, Supply AC/DC 24 V | Z-UIC |
| Positioner for wall mounting | SGA24 |
| Positioner for built-in mounting | SGE24 |
| Positioner for front-panel mounting | SGF24 |
| Positioner for wall mounting | CRP24-B1 |

**Mechanical accessories**

| Description | Type |
|---|---|
| End stop kit, Multipack 20 pcs. | Z-AS2 |
| Rotary support, for linear actuator, for compensation of transverse forces | Z-DS1 |
| Coupling piece M6 | Z-KS2 |

## Electrical installation

**Caution: Mains voltage!**
**Parallel connection of other actuators possible. Observe the performance data.**

**Wire colours:**
1 = blue
2 = brown
1 = black
2 = red
3 = white
5 = orange

AC 230 V, modulating

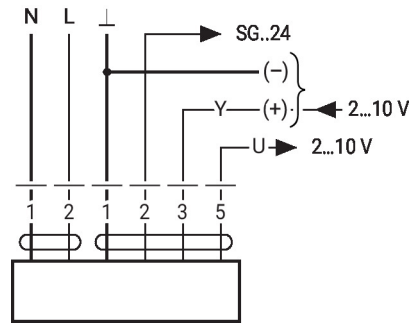


Auxiliary supply only for positioner SG..24

| 1 (N) | 2 (L) | 3 | 1 0 | 1 0 |
|---|---|---|---|---|
| | | 2 V | ↑ | ↓ |
| | | 10 V | ↓ | ↑ |

## Installation notes

**If a rotary support and/or coupling piece is used, losses in the actuation force losses are to be expected.**

## Installation notes

**Applications without transverse forces**

The linear actuator is screwed directly to the housing at three points. Afterwards, the head of the gear rod is fastened to the moving part of the ventilation application (e.g. damper or slide valve).

**Applications with transverse forces**

Connect the coupling piece with the internal thread (Z-KS2) to the head of the gear rod. Screw the rotary support (Z-DS1) to the ventilation application. Afterwards, the linear actuator is screwed to the previously mounted rotary support with the enclosed screw. Then, the coupling piece, which is mounted to the head of the gear rod, is attached to the moving part of the ventilating application (e.g. damper or slide valve). The transverse forces can be compensated for to a certain limit with the rotary support and/or coupling piece. The maximum permissible swivel angle of the rotary support and coupling piece is 10°, laterally and upwards.
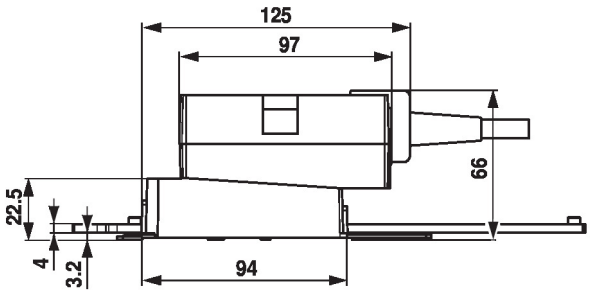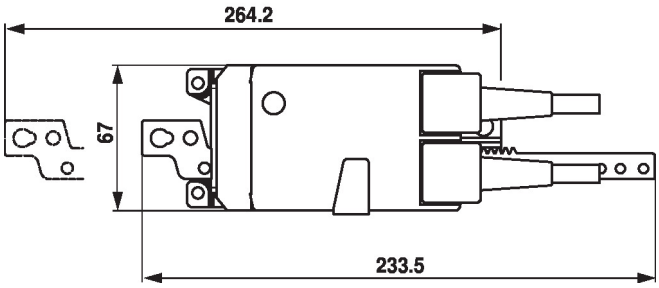
## Dimensions