Rotary actuator with fail-safe for ball valves

- Torque motor 4 Nm
- Nominal voltage AC/DC 24 V
- Control Open/close
- Deenergised closed (NC)
- With 2 integrated auxiliary switches

Picture may differ from product

Technical data

Electrical data	Nominal voltage	AC/DC 24 V
	Nominal voltage frequency	50/60 Hz
	Nominal voltage range	AC 19.2...28.8 V / DC 21.6...28.8 V
	Power consumption in operation	5 W
	Power consumption in rest position	2.5 W
	Power consumption for wire sizing	7 VA
	Auxiliary switch	2x SPDT, 1x 10° / 1x 85°
	Auxiliary switch note	1x 10° / 1x 85°
	Switching capacity auxiliary switch	1 mA...3 A (0.5 A inductive), DC 5 V...AC 250 V
	Connection supply / control	Cable 1 m, 2x 0.75 mm^2
	Connection auxiliary switch	Cable 1 m, 6x 0.75 mm^2
	Parallel operation	Yes (note the performance data)
Functional data	Torque motor	4 Nm
	Torque fail-safe	4 Nm
	Direction of motion fail-safe	Deenergised NC, valve closed (A–AB = 0%)
	Direction of motion note	for valves with L-bore (A–AB = 100%)
	Manual override	with hand crank, can be fixed in any position
	Running time motor	75 s / 90°
	Running time fail-safe	<20 s @ -20...50°C, <60 s @ -30°C
	Sound power level, motor	50 dB(A)
	Position indication	Mechanical
	Service life	Min. 60'000 fail-safe positions
Safety data	Protection class IEC/EN	III, Safety Extra-Low Voltage (SELV)
	Protection class auxiliary switch IEC/EN	II, reinforced insulation
	Degree of protection IEC/EN	IP54
	EMC	CE according to 2014/30/EU
	Low voltage directive	CE according to 2014/35/EU
	Certification IEC/EN	IEC/EN 60730-1 and IEC/EN 60730-2-14
	Type of action	Type 1
	Rated impulse voltage supply / control	0.8 kV
	Rated impulse voltage auxiliary switch	2.5 kV
	Pollution degree	3
	Ambient humidity	Max. 95% RH, non-condensing
	Ambient temperature	-30...50°C [-22...122°F]
	Storage temperature	-40...80°C [-40...176°F]
	Servicing	maintenance-free
Weight	Weight	1.6 kg

Safety notes

- This device has been designed for use in stationary heating, ventilation and air-conditioning systems and must not be used outside the specified field of application, especially in aircraft or in any other airborne means of transport.
- Outdoor application: Only possible if no (sea) water, snow, ice, sunlight or aggressive gases act directly on the device and if it is ensured that the ambient conditions remain within the limit values specified in the data sheet at all times.
- Only authorised specialists may carry out installation. All applicable legal or institutional installation regulations must be complied with during installation.
- The device may only be opened at the manufacturer's site. It does not contain any parts that can be replaced or repaired by the user.
- Cables must not be removed from the device.
- The device contains electrical and electronic components and must not be disposed of as household refuse. All locally valid regulations and requirements must be observed.

Product features

Operating mode The actuator moves the valve to the operating position at the same time as tensioning the return spring. The valve is turned back to the fail-safe position by spring force when the supply voltage is interrupted.

Simple direct mounting Simple direct mounting on the ball valve with only one screw. The mounting orientation in relation to the ball valve can be selected in 90° steps.

Manual override The valve can be manually operated and fixed in any position using a hand crank. Unlocking is carried out manually or automatically by applying the operating voltage.

High functional reliability The actuator is overload protected, requires no limit switches and automatically stops when the end stop is reached.

Signalling The actuator has two auxiliary switches with fixed settings. They permit a 10° or 85° angle of rotation to be signaled.

Electrical installation

Supply from isolating transformer.

Parallel connection of other actuators possible. Observe the performance data.

The cable cross-section (mm²) must be determined on the basis of the actuator performance data (VA, W), the cable resistance, the number of actuators, and the total cable length according to electrotechnical principles. High voltage drops across the installation cables can affect the function of the actuator if, for example, the nominal voltage range (AC/DC) is not respected.

Wire colours:
1 = black
2 = white
1 = white
2 = white
3 = white
4 = white
5 = white
6 = white

Electrical installation

AC/DC 24 V, open/close

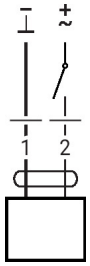

Auxiliary switch

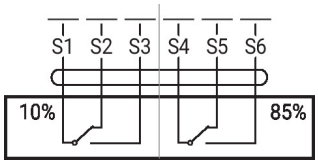

Dimensions

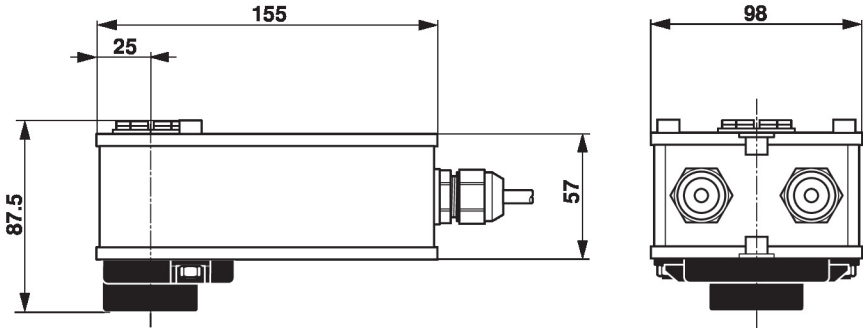

Further documentation

- The complete product range for water applications
- Data sheets for ball valves
- Installation instructions for actuators and/or ball valves
- General notes for project planning