Configurable globe valve actuator for 2-way and 3-way globe valves

- Actuating force 4500 N
- Nominal voltage AC/DC 24 V
- Control modulating 2...10 V variable
- Stroke 50 mm

Picture may differ from product

Technical data

Electrical data	Nominal voltage	AC/DC 24 V
	Nominal voltage frequency	50/60 Hz
	Nominal voltage range	AC 19.2...28.8 V / DC 21.6...28.8 V
	Power consumption in operation	6 W
	Power consumption in rest position	1.5 W
	Power consumption for wire sizing	11 VA
	Connection supply / control	Cable 1 m, 4x 0.75 mm²
	Parallel operation	Yes (note the performance data)
Functional data	Actuating force motor	4500 N
	Operating range Y	2...10 V
	Input impedance	100 kΩ
	Operating range Y variable	Start point 0.5...30 V End point 2.5...32 V
	Operating modes optional	Open/close 3-point (AC only) Modulating (DC 0...32 V)
	Position feedback U	2...10 V
	Position feedback U note	Max. 0.5 mA
	Position feedback U variable	Start point 0.5...8 V End point 2.5...10 V
	Position accuracy	±5%
	Manual override	with push-button, can be locked
	Stroke	50 mm
	Running time motor	150 s / 50 mm
	Running time motor variable	90...150 s
	Sound power level, motor	56 dB(A)
	Adaptation setting range	manual (automatic on first power-up)
	Adaptation setting range variable	No action Adaptation when switched on Adaptation after pushing the manual override button
	Override control	MAX (maximum position) = 100% MIN (minimum position) = 0% ZS (intermediate position, AC only) = 50%
	Override control variable	MAX = (MIN + 33%)...100% ZS = MIN...MAX
	Position indication	Mechanical, 5...50 mm stroke

Technical data

Safety data	Protection class IEC/EN	III, Safety Extra-Low Voltage (SELV)
	Power source UL	Class 2 Supply
	Degree of protection IEC/EN	IP54
	Degree of protection NEMA/UL	NEMA 2
	Housing	UL Enclosure Type 2
	EMC	CE according to 2014/30/EU
	Certification IEC/EN	IEC/EN 60730-1 and IEC/EN 60730-2-14
	UL Approval	cULus according to UL60730-1A, UL60730-2-14 and CAN/CSA E60730-1 The UL marking on the actuator depends on the production site, the device is UL-compliant in any case
	Type of action	Type 1
	Rated impulse voltage supply / control	0.8 kV
	Pollution degree	3
	Ambient humidity	Max. 95% RH, non-condensing
	Ambient temperature	0...50°C [32...122°F]
	Storage temperature	-40...80°C [-40...176°F]
	Servicing	maintenance-free
Weight	Weight	5.6 kg

Safety notes

- This device has been designed for use in stationary heating, ventilation and air-conditioning systems and must not be used outside the specified field of application, especially in aircraft or in any other airborne means of transport.
- Outdoor application: only possible in case that no (sea) water, snow, ice, insolation or aggressive gases interfere directly with the device and that it is ensured that the ambient conditions remain within the thresholds according to the data sheet at any time.
- Only authorised specialists may carry out installation. All applicable legal or institutional installation regulations must be complied with during installation.
- The switch for changing the direction of motion and so the closing point may be adjusted only by authorised specialists. The direction of motion is critical, particularly in connection with frost protection circuits.
- The device may only be opened at the manufacturer's site. It does not contain any parts that can be replaced or repaired by the user.
- The device contains electrical and electronic components and must not be disposed of as household refuse. All locally valid regulations and requirements must be observed.

Product features

Operating mode

The actuator is connected with an analogue control signal Y (note the operating range) and drives to the position defined. The measuring voltage U serves for the electrical display of the actuator position 0...100% and as control signal for other actuators.

Configurable device

The factory settings cover the most common applications. Single parameters can be modified with Belimo Assistant 2 or ZTH EU.

Mounting on third-party valves

The RetroFIT+ actuators for installation on a wide range of valves from various manufacturers are comprised of an actuator, universal valve neck adapter and universal valve stem adapter. Adapt the valve neck and valve stem to begin with, then attach the RetroFIT+ actuator to the valve neck adapter, connect to the valve and start up. The valve neck adapter/actuator can be rotated by 360° on the valve neck, provided the size of the installed valve permits.

Product features

Mounting on Belimo valves
Use standard actuators from Belimo for mounting on Belimo globe valves.

Manual override
Manual override with push-button possible (the gear train is disengaged for as long as the button is pressed or remains locked).
The stroke can be adjusted by using a hexagon socket screw key (5 mm), which is inserted into the top of the actuator. The stem extends when the key is rotated clockwise.

High functional reliability
The actuator is overload protected, requires no limit switches and automatically stops when the end stop is reached.

Position indication
The stroke is indicated mechanically on the bracket with tabs. The stroke range adjusts itself automatically during operation.

Home position
Factory setting: Actuator stem is retracted.
The first time the supply voltage is switched on, i.e. at the time of commissioning, the actuator carries out an adaptation, which is when the operating range and position feedback adjust themselves to the mechanical setting range.
The actuator then moves into the position defined by the control signal.

Adaptation and synchronisation
An adaptation can be triggered manually by pressing the "Adaptation" button or with Belimo Assistant 2. Both mechanical end stops are detected during the adaptation (entire setting range).
Automatic synchronisation after pressing the manual override button is configured. The synchronisation is in the home position (0%).
The actuator then moves into the position defined by the control signal.
A range of settings can be made using Belimo Assistant 2.

Setting direction of motion
When actuated, the direction-of-stroke switch changes the direction of motion in normal operation.

Accessories

Tools

Description	Type
Service tool, with ZIP-USB function, for configurable and communicative Belimo actuators, VAV controller and HVAC performance devices	ZTH EU
Service tool for wired and wireless setup, on-site operation and troubleshooting.	Belimo Assistant 2
Adapter for Service-Tool ZTH	MFT-C
Connecting cable 5 m, A: RJ11 6/4 LINK.10, B: 6-pin for connection to service socket	ZK1-GEN
Connecting cable 5 m, A: RJ11 6/4 LINK.10, B: free wire end for connection to MP/PP terminal	ZK2-GEN
Belimo Assistant Link Bluetooth and USB to NFC and MP-Bus converter for configurable and communicative devices	LINK.10

Electrical accessories

Description	Type
Auxiliary switch 2x SPDT add-on	S2A-H

Mechanical accessories

Description	Type
Spacer ring for Sauter, stroke 50 mm	ZRV-301
Spacer ring for Siebe, stroke 50 mm	ZRV-302
Spacer ring for Johnson Control, stroke 50 mm	ZRV-303
Washer Sauter for Sauter, stroke 50 mm	ZRV-304

Electrical installation

Supply from isolating transformer.
Parallel connection of other actuators possible. Observe the performance data.
Direction of stroke switch factory setting: Actuator stem retracted (▲).

Electrical installation

Wire colours:
1 = black
2 = red
3 = white
4 = pink
5 = orange

AC/DC 24 V, modulating

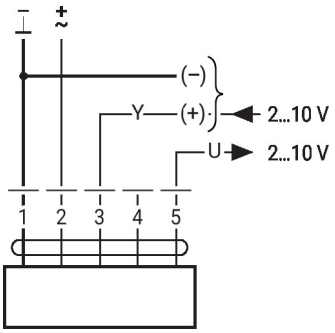

Further electrical installations

Functions with basic values (conventional mode)

Override control with AC 24 V with relay contacts

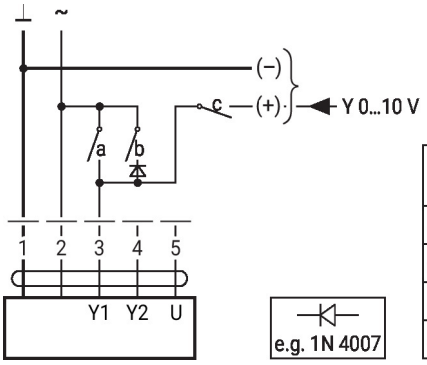

1	2	a	b	c	
L	L	–	–	–	0 %
L	L	–	L	–	ZS 50%
L	L	L	–	–	100%
L	L	–	–	L	Y

Override control with AC 24 V with rotary switch

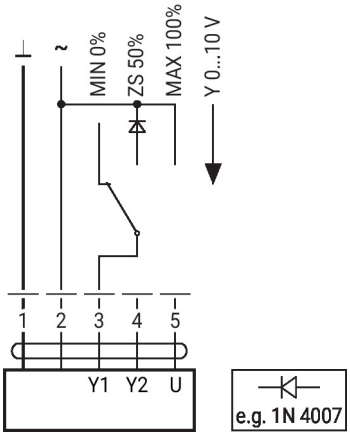

Control remotely 0...100% with positioner SG..

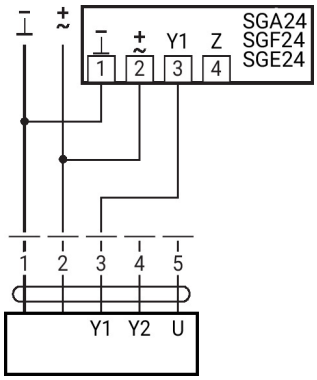

Functions with basic values (conventional mode)

Minimum limit with positioner SG..

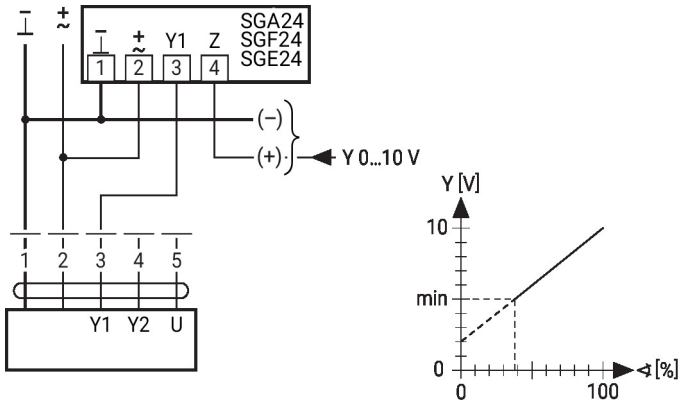

Primary/secondary operation (position-dependent)

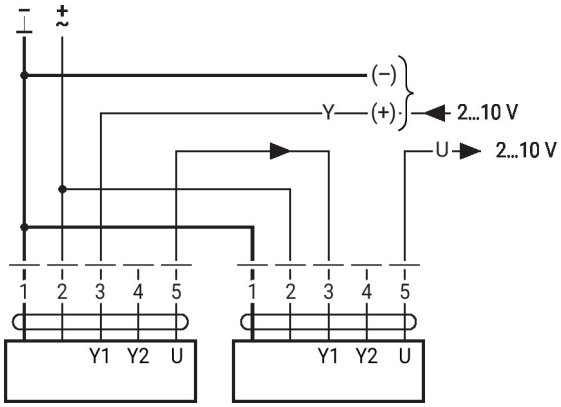

Control with 4...20 mA via external resistor

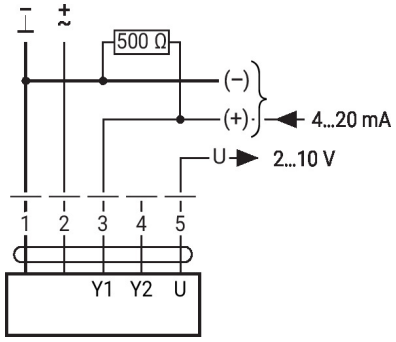

Functional check

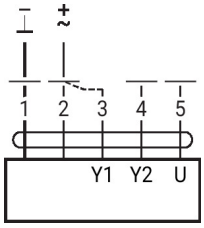

Procedure

1. Apply 24 V to connection 1 and 2
2. Disconnect connection 3:
- with upwards direction of motion: closing point at top
- with downwards direction of motion: closing point at bottom
3. Short circuit connections 2 and 3:
- Actuator runs in the opposite direction

Functions with specific parameters (configuration necessary)

Override control and limiting with AC 24 V with relay contacts

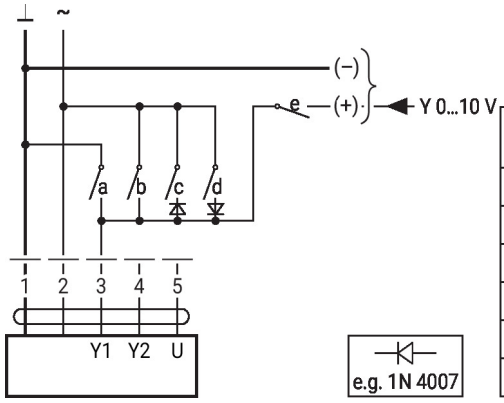

1	2	a	b	c	d	e	
							Close[1)]
							MIN
							ZS
							MAX
							Open
							Y

Control open/close

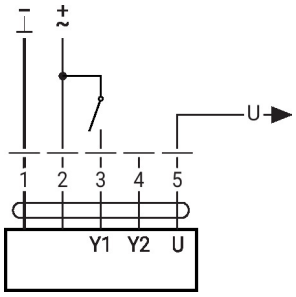

Further electrical installations

Functions with specific parameters (configuration necessary)

Override control and limiting with AC 24 V with rotary switch

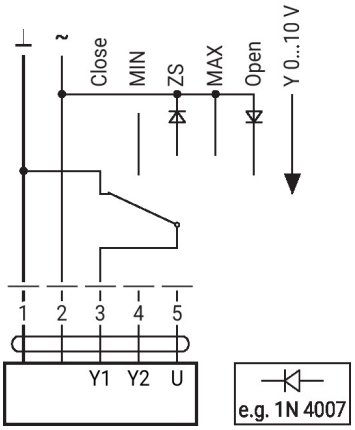

Caution:
The "Close" function is only guaranteed if the start point of the operating range is defined as min. 0.5 V.

Control 3-point

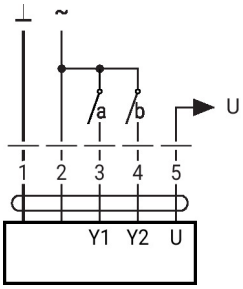

1	2	3	4		
				↓	↑
				↓	↑
				stop	stop
				↑	↓

Operating controls and indicators

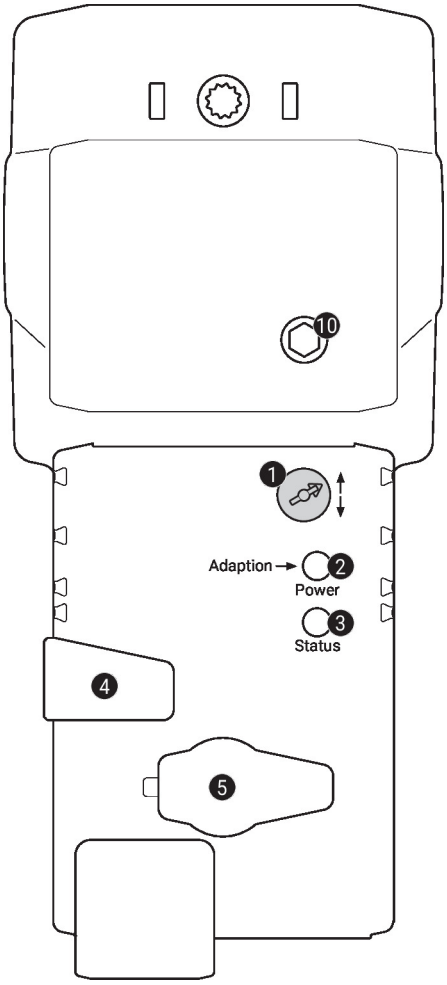

1 Direction-of-stroke switch

Switch over:	Direction of stroke changes

2 Push-button and LED display green

Off:	No power supply or malfunction
On:	In operation
Press button:	Triggers stroke adaptation, followed by standard mode

3 Push-button and LED display yellow

Off:	Standard mode
On:	Adaptation or synchronisation process active
Press button:	No function

4 Manual override button

Press button:	Gear train disengages, motor stops, manual override possible
Release button:	Gear train engages, standard mode

5 Service plug

For connecting configuration and service tools

10 Manual override

Clockwise:	Actuator stem extends
Counterclockwise:	Actuator stem retracts

Service

Wired connection

The device can be configured by ZTH EU via the service socket.
For an extended configuration, Belimo Assistant 2 can be connected.

Connection ZTH EU / Belimo Assistant 2

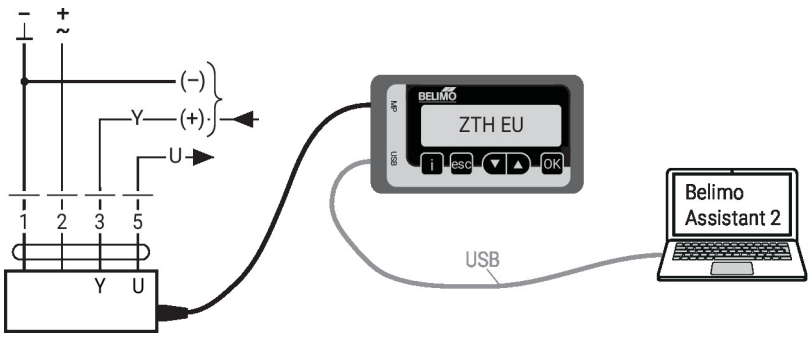

Dimensions

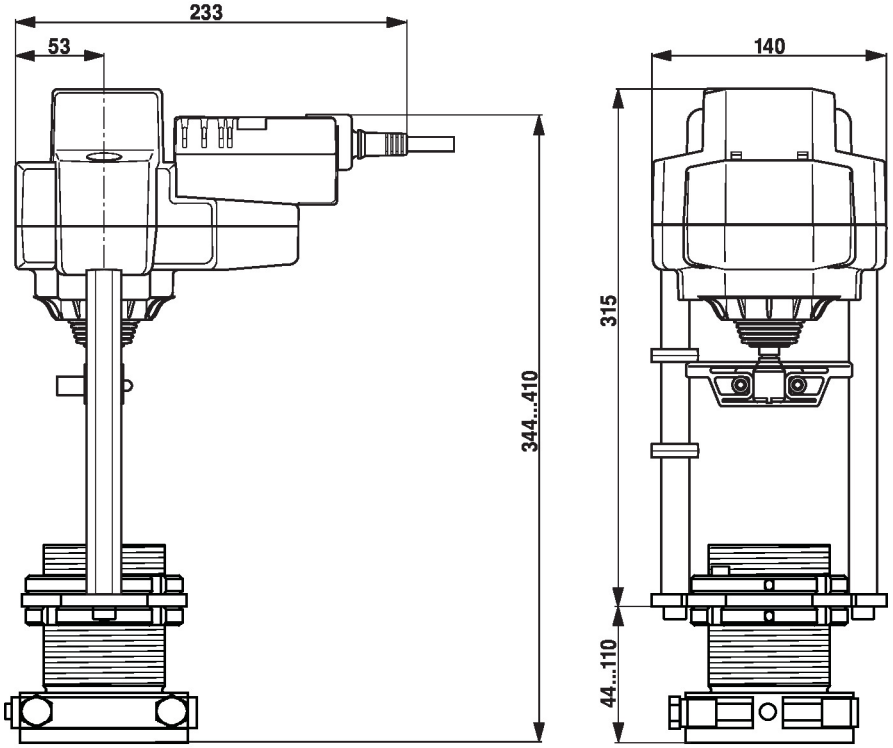

Further documentation

- Installation instructions for actuators
- Quick Guide – Belimo Assistant 2