Configurable linear actuator for adjusting dampers and slide valves in technical building installations

- Air damper size up to approx. 1.3 m²
- Actuating force 200 N
- Nominal voltage AC/DC 24 V
- Control modulating 2...10 V variable
- Position feedback 2...10 V variable
- Length of Stroke Max. 100 mm, adjustable in 20 mm increments
- Running time motor 7 s variable

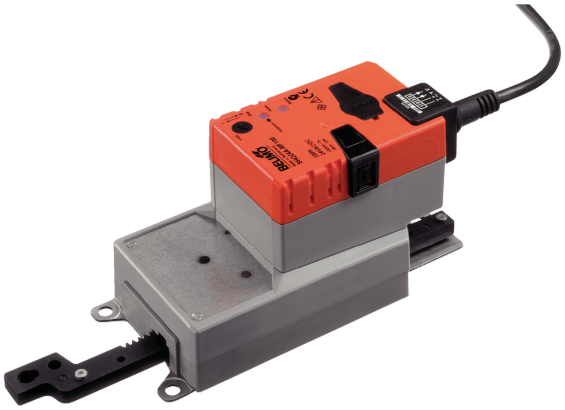

Picture may differ from product

Technical data

Electrical data	Nominal voltage	AC/DC 24 V
	Nominal voltage frequency	50/60 Hz
	Nominal voltage range	AC 19.2...28.8 V / DC 21.6...28.8 V
	Power consumption in operation	13 W
	Power consumption in rest position	2 W
	Power consumption for wire sizing	23 VA
	Inrush current (Imax)	20.0 A @ 5 ms
	Connection supply / control	Cable 1 m, 4x 0.75 mm²
	Parallel operation	Yes (note the performance data)
Functional data	Actuating force motor	200 N
	Actuating force variable	25%, 50%, 75% reduced
	Operating range Y	2...10 V
	Input impedance	100 kΩ
	Operating range Y variable	Start point 0.5...30 V End point 2.5...32 V
	Operating modes optional	Open/close Modulating (DC 0...32 V)
	Position feedback U	2...10 V
	Position feedback U note	Max. 0.5 mA
	Position feedback U variable	Start point 0.5...8 V End point 2.5...10 V
	Position accuracy	±5%
	Direction of motion motor	selectable with switch
	Direction of motion variable	electronically reversible
	Direction of motion note	Y = 0 V: with switch 0 (retracted) / 1 (extended)
	Manual override	with push-button, can be locked
	Stroke	100 mm
	Length of Stroke	Max. 100 mm, adjustable in 20 mm increments
	Minimum stroke	40 mm
	Stroke limitation	can be limited on both sides with mechanical end stops
	Running time motor	7 s / 100 mm
	Running time motor variable	7...30 s / 100 mm
	Sound power level, motor	56 dB(A)
	Adaptation setting range	manual (automatic on first power-up)

Functional data	Adaptation setting range variable	No action Adaptation when switched on Adaptation after pushing the manual override button
	Override control	MAX (maximum position) = 100% MIN (minimum position) = 0% ZS (intermediate position, AC only) = 50%
	Override control variable	MAX = (MIN + 32%)...100% MIN = 0%...(MAX – 32%) ZS = MIN...MAX
Safety data	Protection class IEC/EN	III, Safety Extra-Low Voltage (SELV)
	Power source UL	Class 2 Supply
	Degree of protection IEC/EN	IP54
	Degree of protection NEMA/UL	NEMA 2
	Housing	UL Enclosure Type 2
	EMC	CE according to 2014/30/EU
	Certification IEC/EN	IEC/EN 60730-1 and IEC/EN 60730-2-14
	UL Approval	cULus according to UL60730-1A, UL60730-2-14 and CAN/CSA E60730-1 The UL marking on the actuator depends on the production site, the device is UL-compliant in any case
	Hygiene test	According to VDI 6022 Part 1 / SWKI VA 104-01, cleanable and disinfectable, low emission
	Type of action	Type 1
	Rated impulse voltage supply / control	0.8 kV
	Pollution degree	3
	Ambient humidity	Max. 95% RH, non-condensing
	Ambient temperature	-30...40°C [-22...104°F]
	Ambient temperature note	Caution: 40...50°C [104...122°F] utilisation possible only under certain restrictions. Please contact your supplier.
	Storage temperature	-40...80°C [-40...176°F]
	Servicing	maintenance-free
Weight	Weight	1.2 kg

Safety notes

- This device has been designed for use in stationary heating, ventilation and air-conditioning systems and must not be used outside the specified field of application, especially in aircraft or in any other airborne means of transport.
- Outdoor application: only possible in case that no (sea) water, snow, ice, insolation or aggressive gases interfere directly with the device and that it is ensured that the ambient conditions remain within the thresholds according to the data sheet at any time.
- Only authorised specialists may carry out installation. All applicable legal or institutional installation regulations must be complied with during installation.
- The device may only be opened at the manufacturer's site. It does not contain any parts that can be replaced or repaired by the user.
- Cables must not be removed from the device.
- The rotary supports and coupling pieces available as accessories must always be used if transverse forces are likely. In addition, the actuator must not be tightly bolted to the application. It must remain movable via the rotary support (refer to «Installation notes»).
- If the actuator is exposed to severely contaminated ambient air, appropriate precautions must be taken on the system side. Excessive deposits of dust, soot etc. can prevent the gear rod from being extended and retracted correctly.
- If not installed horizontally, the maual override button may only be actuated when there is no pressure on the gear rod.
- To calculate the actuating force required for air dampers and slide valves, the specifications supplied by the damper manufacturers concerning the cross- section and the design, as well as the installation situation and the ventilation conditions must be observed.
- If a rotary support and/or coupling piece is used, actuation force losses are to be expected.
- Self-adaptation is necessary when the system is commissioned or whenever the stroke limiting is adjusted (press the adaptation push-button).
- The device contains electrical and electronic components and must not be disposed of as household refuse. All locally valid regulations and requirements must be observed.

Product features

Operating mode
The actuator is connected with an analogue control signal Y (note the operating range) and drives to the position defined. The measuring voltage U serves for the electrical display of the damper position 0...100% and as control signal for other actuators.

Configurable device
The factory settings cover the most common applications. Single parameters can be modified with Belimo Assistant 2 or ZTH EU.

Simple direct mounting
The actuator can be directly connected with the application using the enclosed screws. The head of the gear rod is connected to the moving part of the ventilating application individually on the mounting side or with the Z-KS1 coupling piece provided for this purpose.

Manual override
Manual override with push-button possible (the gear train is disengaged for as long as the button is pressed or remains locked).

Adjustable stroke
If a stroke limitation will be adjusted, the operating range on this side of the gear rod can be used starting with an extension length of 20 mm and then can be limited respectively in increments of 20 mm by means of the mechanical end stops Z-AS1.

A minimum permissible stroke of 40 mm must be allowed for.

High functional reliability
The actuator is overload protected, requires no limit switches and automatically stops when the end stop is reached.

Product features

Home position

The first time the supply voltage is switched on, i.e. at the time of commissioning, the actuator carries out an adaptation, which is when the operating range and position feedback adjust themselves to the mechanical setting range.

The detection of the mechanical end stops enables a gentle approach to the end positions, thus protecting the actuator mechanics.

The actuator then moves into the position defined by the control signal.

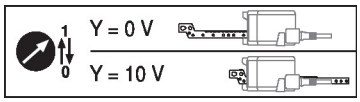

Adaptation and synchronisation

An adaptation can be triggered manually by pressing the "Adaptation" button or with Belimo Assistant 2. Both mechanical end stops are detected during the adaptation (entire setting range).

Automatic synchronisation after pressing the manual override button is configured. The synchronisation is in the home position (0%).

The actuator then moves into the position defined by the control signal.

A range of settings can be made using Belimo Assistant 2.

Accessories

Tools

Description	Type
Service tool, with ZIP-USB function, for configurable and communicative Belimo actuators, VAV controller and HVAC performance devices	ZTH EU
Service tool for wired and wireless setup, on-site operation and troubleshooting.	Belimo Assistant 2
Adapter for Service-Tool ZTH	MFT-C
Connecting cable 5 m, A: RJ11 6/4 LINK.10, B: 6-pin for connection to service socket	ZK1-GEN
Connecting cable 5 m, A: RJ11 6/4 LINK.10, B: free wire end for connection to MP/PP terminal	ZK2-GEN
Belimo Assistant Link Bluetooth and USB to NFC and MP-Bus converter for configurable and communicative devices	LINK.10

Electrical accessories

Description	Type
Signal converter voltage/current 100 kΩ 4...20 mA, Supply AC/DC 24 V	Z-UIC
Positioner for wall mounting	SGA24
Positioner for built-in mounting	SGE24
Positioner for front-panel mounting	SGF24
Positioner for wall mounting	CRP24-B1

Mechanical accessories

Description	Type
End stop kit, Multipack 20 pcs.	Z-AS1
Rotary support, for linear actuator, for compensation of transverse forces	Z-DS1
Coupling piece M8	Z-KS1

Electrical installation

Supply from isolating transformer.

Parallel connection of other actuators possible. Observe the performance data.

Wire colours:
1 = black
2 = red
3 = white
5 = orange

Electrical installation

AC/DC 24 V, modulating

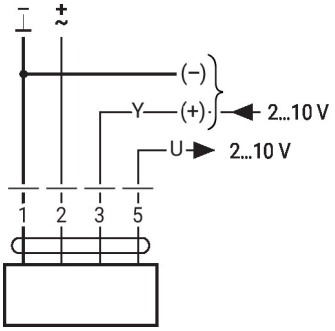

1	2	3	1 0	1 0
		2 V	↓	↑
		10 V	↑	↓

Signal cable lengths

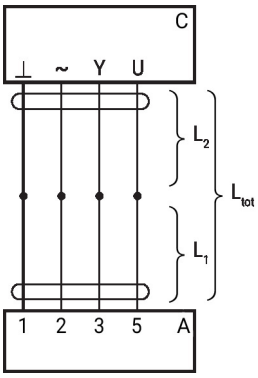

L_2	$L_{tot} = L_1 + L_2$	
⊥ / ~	AC	DC
0.75 mm²	≤30 m	≤5 m
1.00 mm²	≤40 m	≤8 m
1.50 mm²	≤70 m	≤12 m
2.50 mm²	≤100 m	≤20 m

A = Actuator
C = Control unit (controlling unit)
L1 = Connecting cable of the actuator
L2 = Customer cable
Ltot = Maximum signal cable length

Note:
When several actuators are connected in parallel, the maximum signal cable length must be divided by the number of actuators.

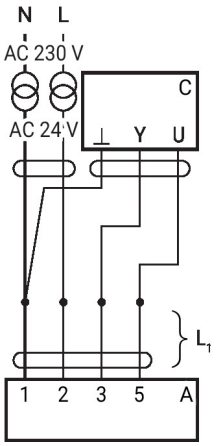

A = Actuator
C = Control unit (controlling unit)
L1 = Connecting cable of the actuator

Note:
There are no special restrictions on installation if the supply and the data cable are routed separately.

Further electrical installations

Functions with basic values (conventional mode)

Override control with AC 24 V with relay contacts

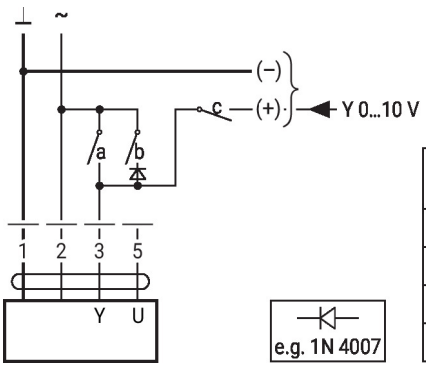

1	2	a	b	c	
⌐	⌐	–	–	–	0 %
⌐	⌐	–	⌐	–	ZS 50%
⌐	⌐	⌐	–	–	100%
⌐	⌐	–	–	⌐	Y

Override control with AC 24 V with rotary switch

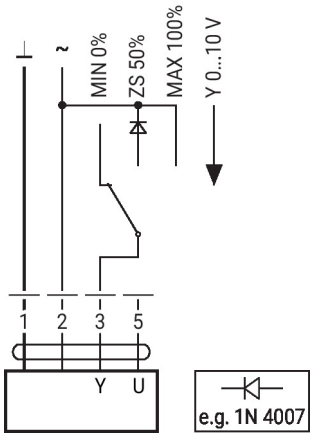

Control remotely 0...100% with positioner SG..

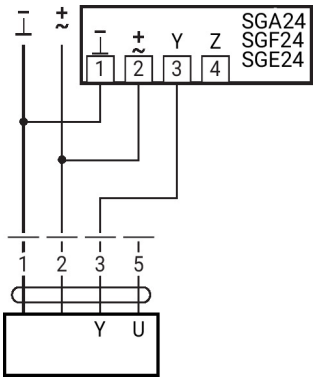

Minimum limit with positioner SG..

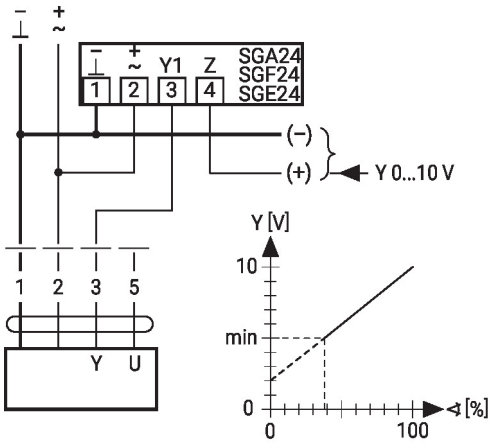

Control with 4...20 mA via external resistor

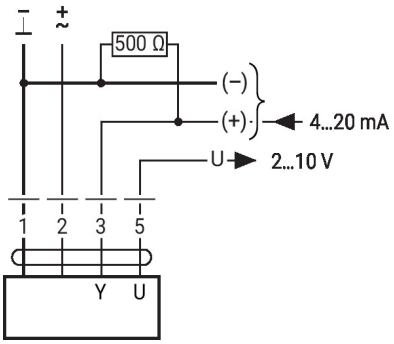

Caution:
The operating range must be set to DC 2...10 V.
The 500 Ohm resistor converts the 4...20 mA current signal to a voltage signal DC 2...10 V.

Further electrical installations

Functions with basic values (conventional mode)

Functional check

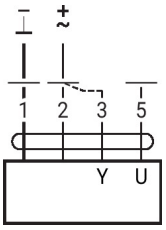

Procedure
1. Connect 24 V to connections 1 and 2
2. Disconnect connection 3:
– with direction of rotation L: Actuator rotates to the left
– with direction of rotation R: Actuator rotates to the right
3. Short-circuit connections 2 and 3:
– Actuator runs in opposite direction

Functions with specific parameters (configuration necessary)

Override control and limiting with AC 24 V with relay contacts

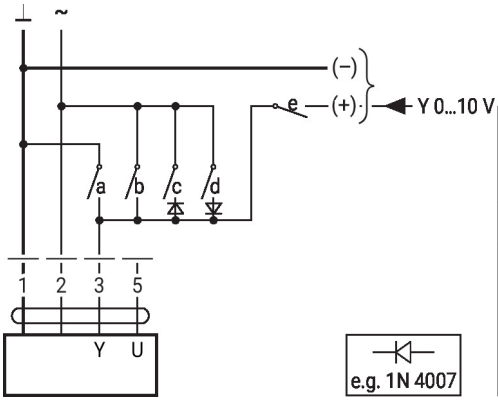

1	2	a	b	c	d	e	
L	L	L	–	–	–	–	Close
L	L	–	–	–	–	–	MIN
L	L	–	–	L	–	–	ZS
L	L	–	L	–	–	–	MAX
L	L	–	–	–	L	–	Open
L	L	–	–	–	–	L	Y

Control open/close

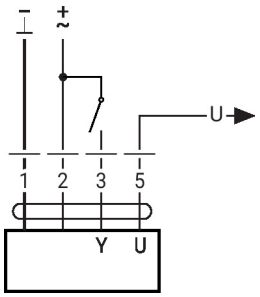

Override control and limiting with AC 24 V with rotary switch

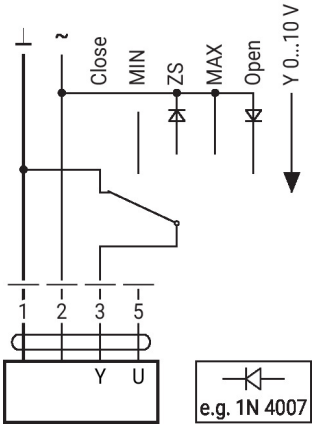

Caution:
The "Close" function is only guaranteed if the start point of the operating range is defined as min. 0.5 V.

Operating controls and indicators

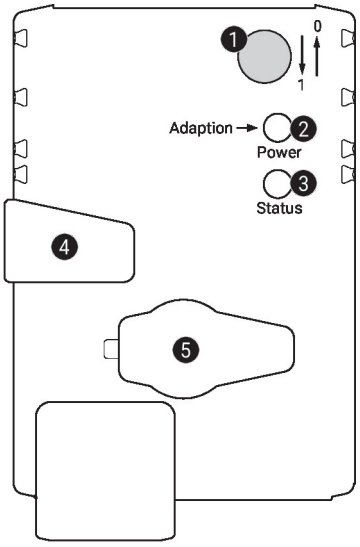

1 Direction-of-stroke switch

Switch over:	Direction of stroke changes

2 Push-button and LED display green

Off:	No power supply or malfunction
On:	In operation
Press button:	Triggers stroke adaptation, followed by standard mode

3 Push-button and LED display yellow

Off:	Standard mode
On:	Adaptation or synchronisation process active
Press button:	No function

4 Manual override button

Press button:	Gear train disengages, motor stops, manual override possible
Release button:	Gear train engages, synchronisation starts, followed by standard mode

5 Service plug
For connecting configuration and service tools

Check power supply connection

2 Off and 3 On	Possible wiring error in power supply

Installation notes

If a rotary support and/or coupling piece is used, losses in the actuation force losses are to be expected.

Applications without transverse forces
The linear actuator is screwed directly to the housing at three points. Afterwards, the head of the gear rod is fastened to the moving part of the ventilation application (e.g. damper or slide valve).

Applications with transverse forces
The coupling piece with the internal thread (Z-KS1) is connected to the head of the gear rod. The rotary support (Z-DS1) is screwed to the ventilation application. Afterwards, the linear actuator is screwed to the previously mounted rotary support with the enclosed screw. Afterwards, the coupling piece, which is mounted to the head of the gear rod, is attached to the moving part of the ventilating application (e.g. damper or slide valve). The transverse forces can be compensated for to a certain limit with the rotary support and/or coupling piece. The maximum permissible swivel angle of the rotary support and coupling piece is 10° (angle), laterally and upwards.

Negative force
Max. 50% of the actuating force (Caution: Application possible only under certain restrictions. Please contact your supplier.)

Service

Wired connection

The device can be configured by ZTH EU via the service socket.

For an extended configuration, Belimo Assistant 2 can be connected.

Connection ZTH EU / Belimo Assistant 2

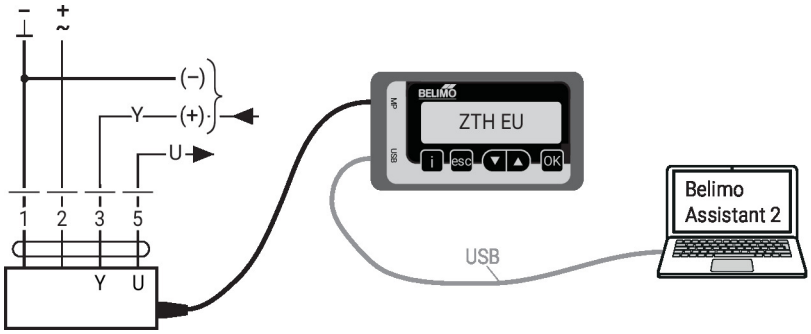

Dimensions

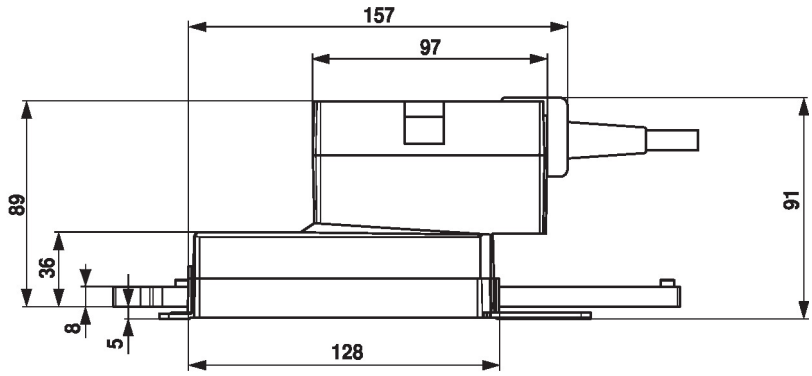

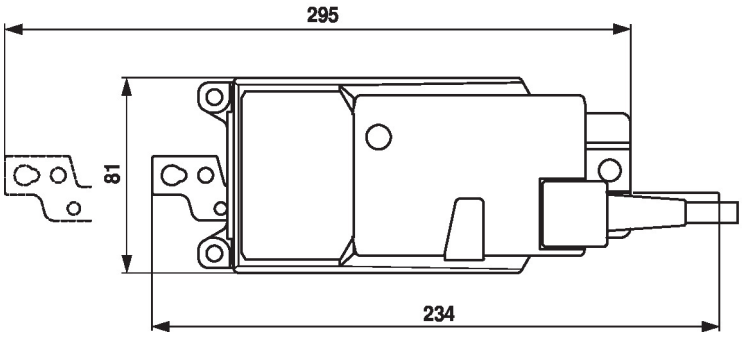

Further documentation

- Quick Guide – Belimo Assistant 2