70687-00001.E

1

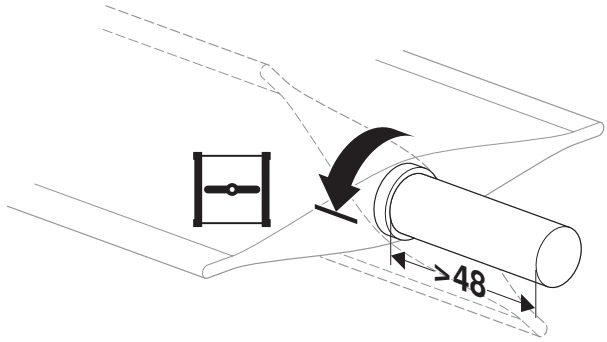

	10...20	≥10	≤20
CrNi (INOX)	12...20	≥10	≤20

2

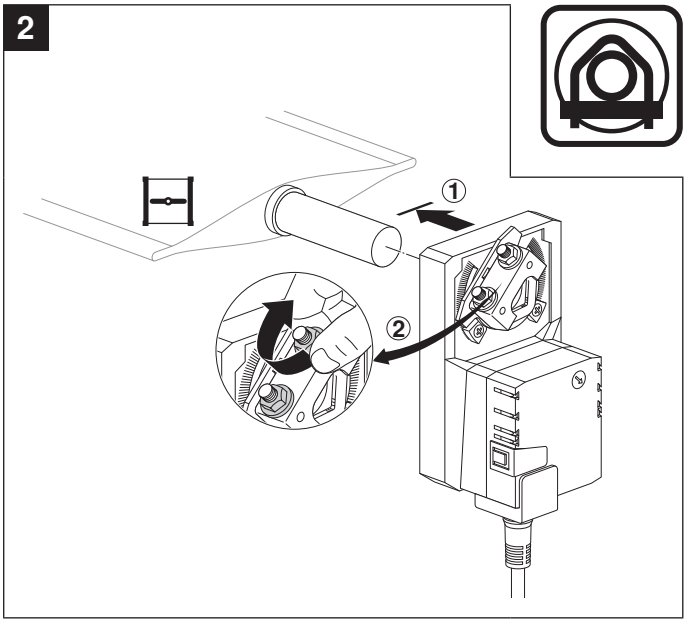

3

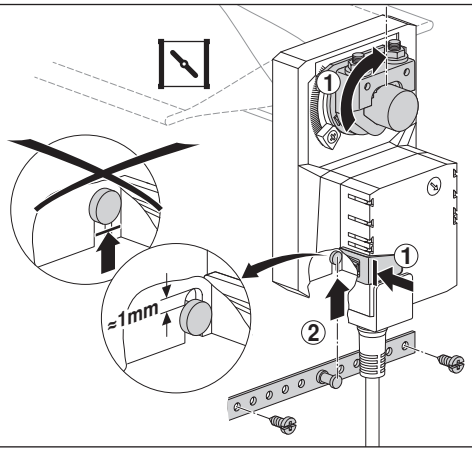

4

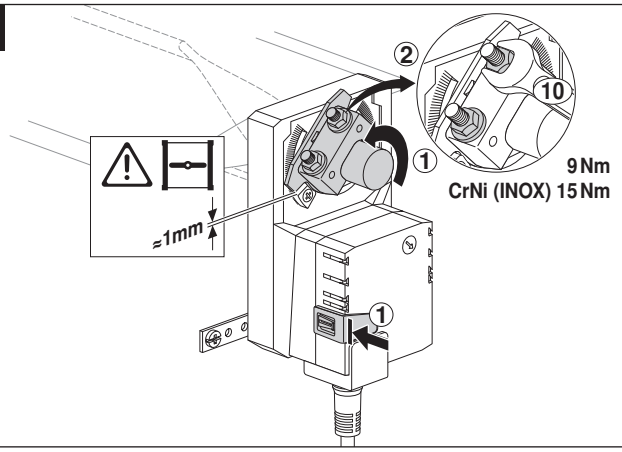

5

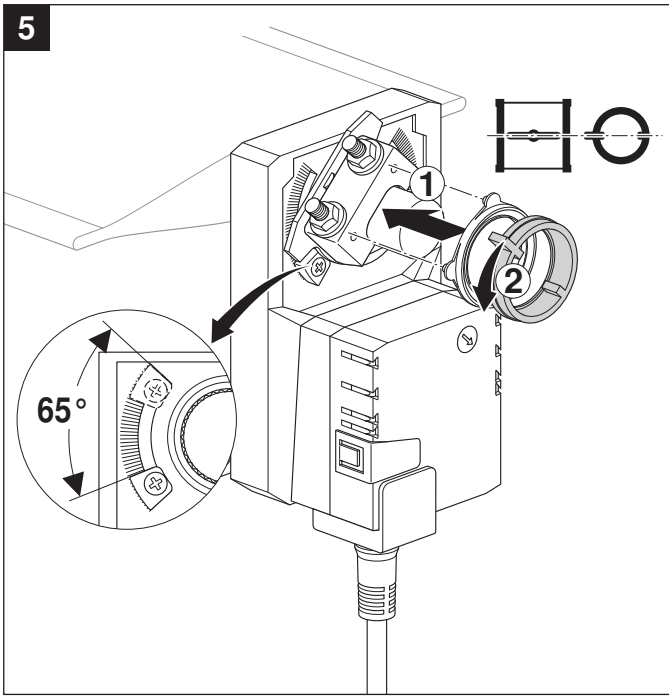

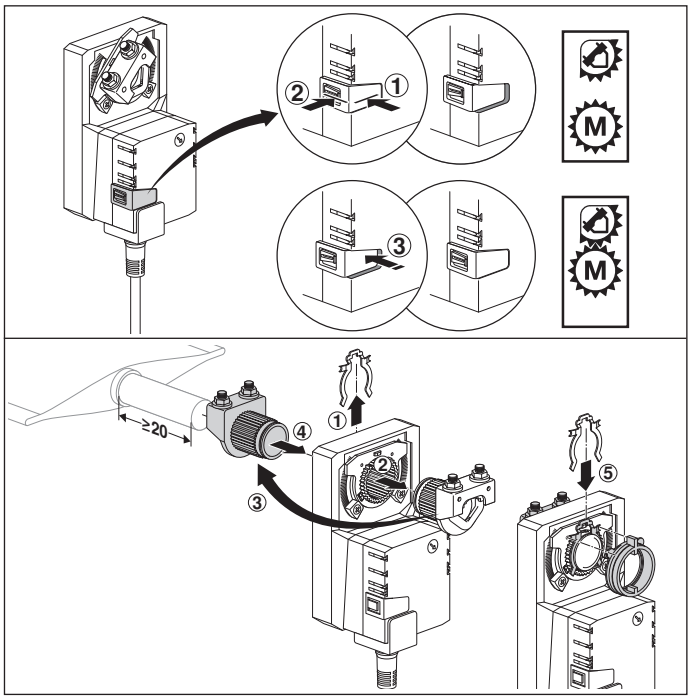

www.belimo.com/safety

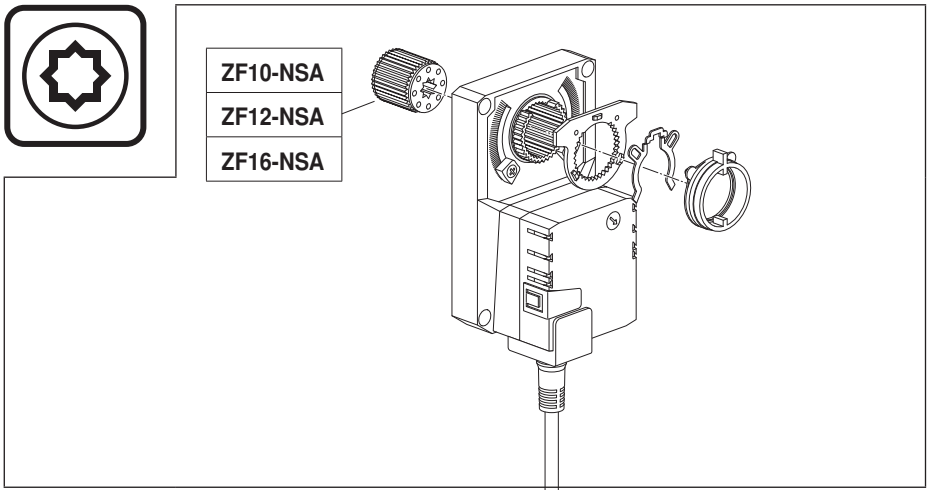

1

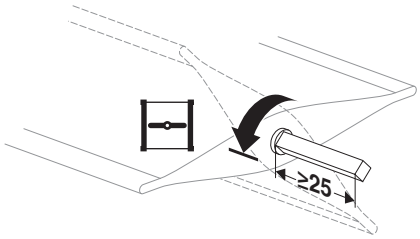

2

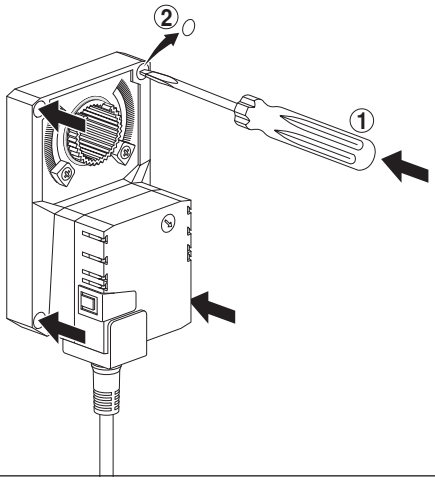

3

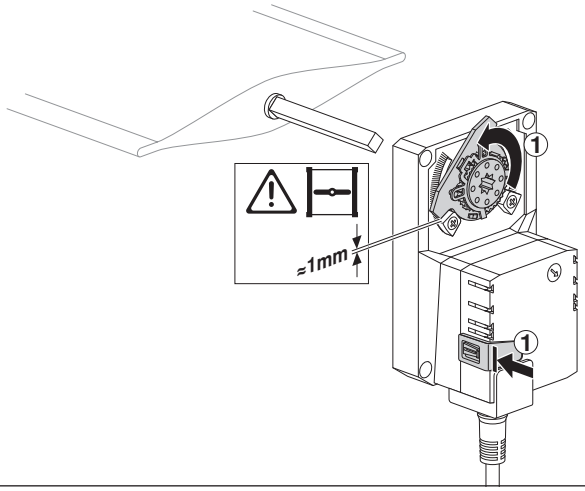

4

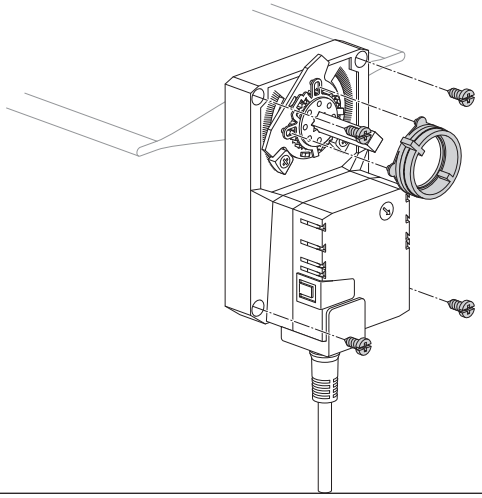

5

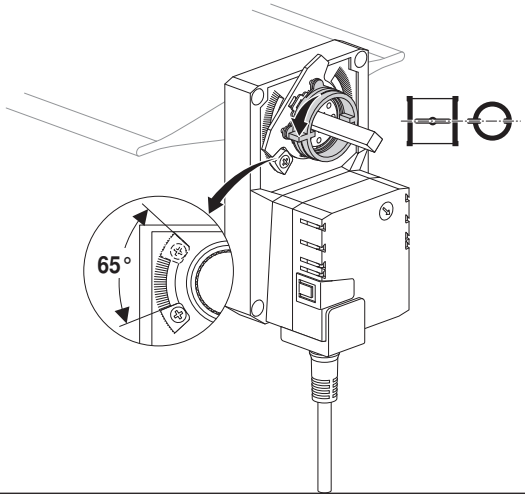

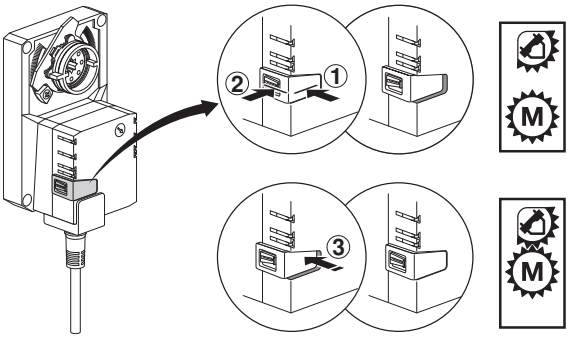

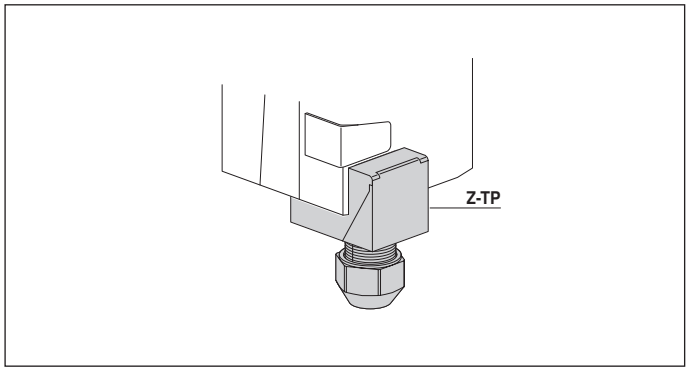
Z-TP

1

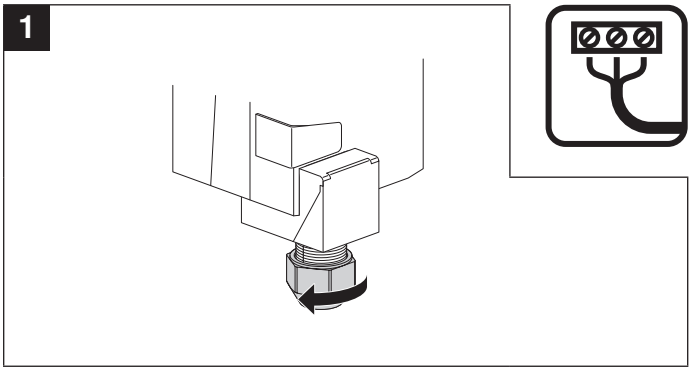

2

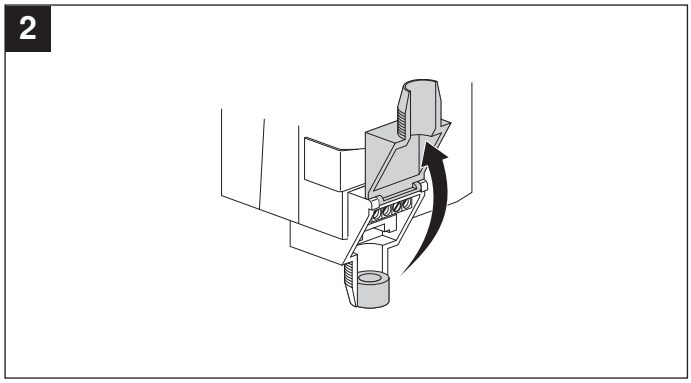

3

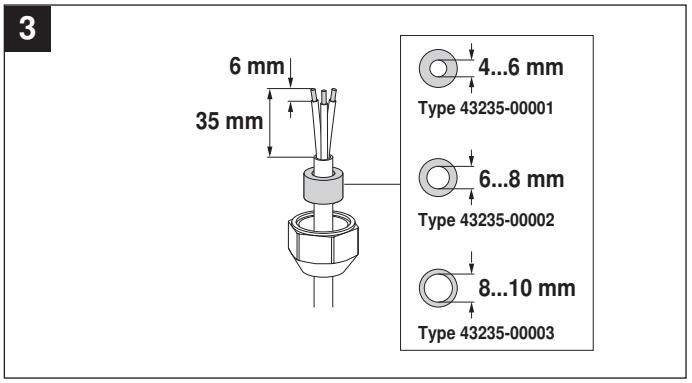
6 mm
35 mm
4...6 mm
Type 43235-00001
6...8 mm
Type 43235-00002
8...10 mm
Type 43235-00003

4

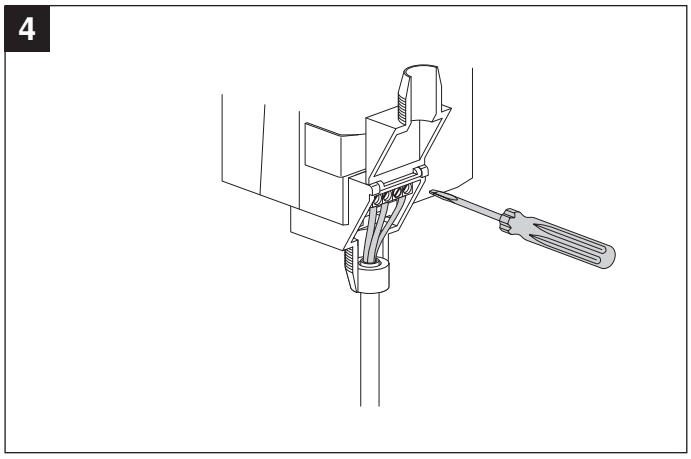

5

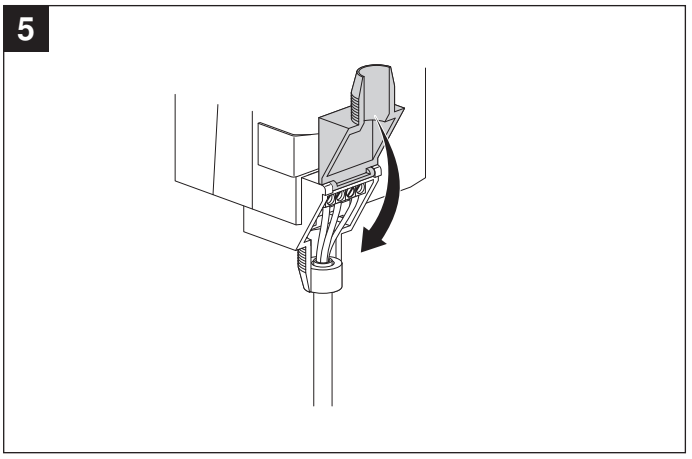

6

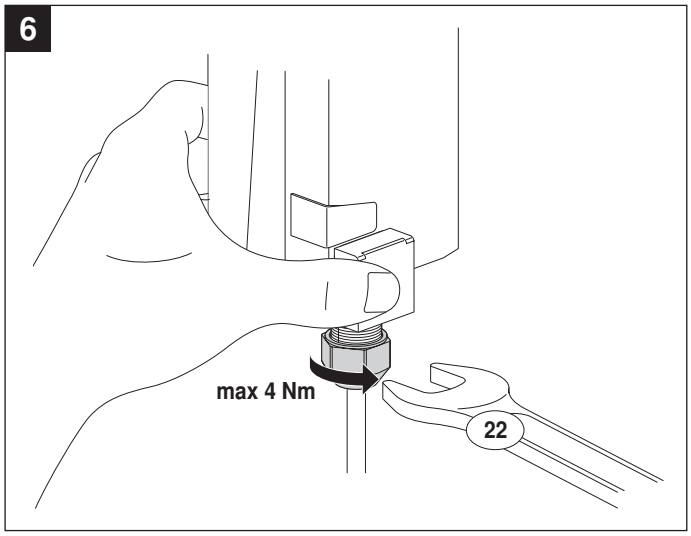
max 4 Nm
22

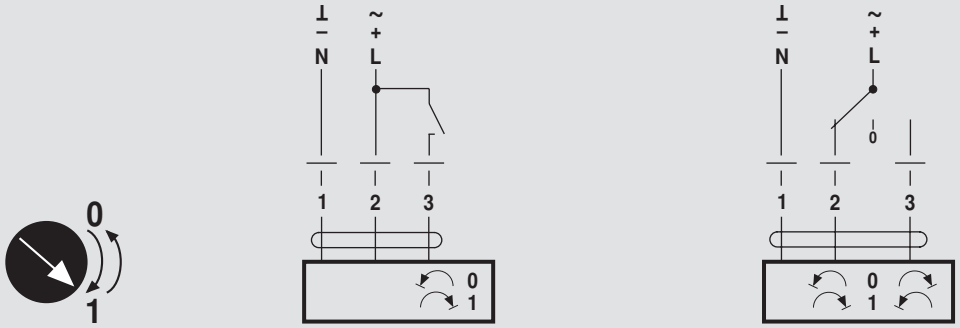

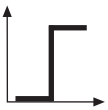

AC 24 V / DC 24 V

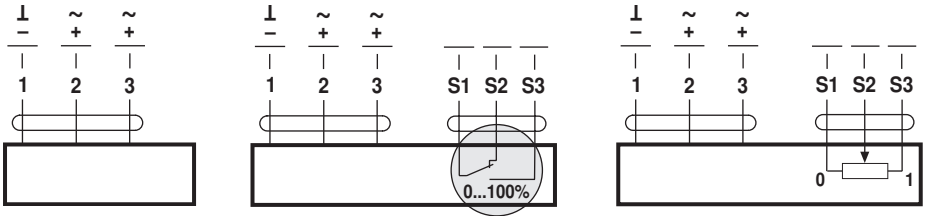

SM24A..
SMD24A..

SM24A-S..

SM24AP5..

AC 100 ... 240 V ⚠

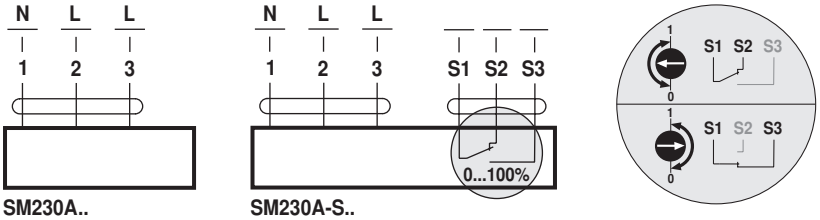

SM230A..
SMD230A..

SM230A-S..

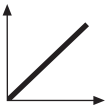

AC 24 V / DC 24 V

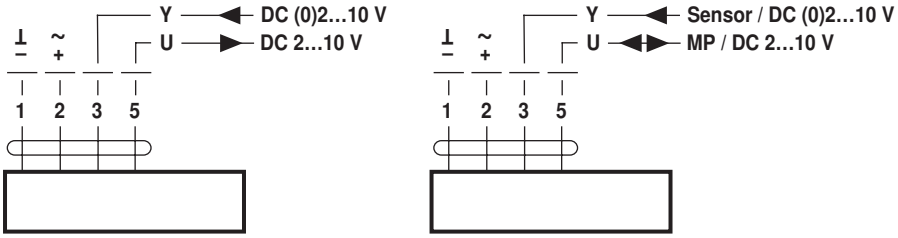

SM24A-SR..
SM24A-MF..

SM24A-MP..

AC 100 ... 240 V ⚠

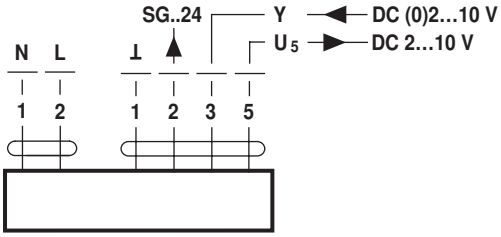

SM230ASR..

AC 24 V / DC 24 V
(SM24A-V / VR..)

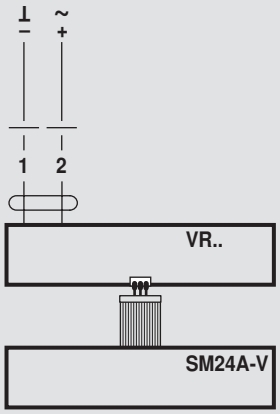

SM24A-V / VR..

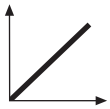

AC 24 V / DC 24 V

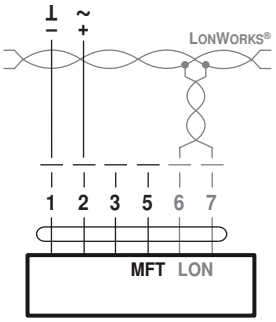

..M24ALON

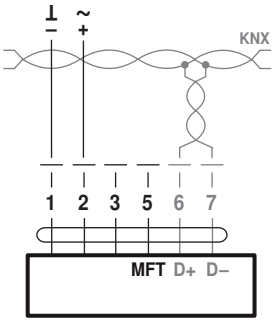

..M24A-KNX

BACnet MS/TP / Modbus RTU

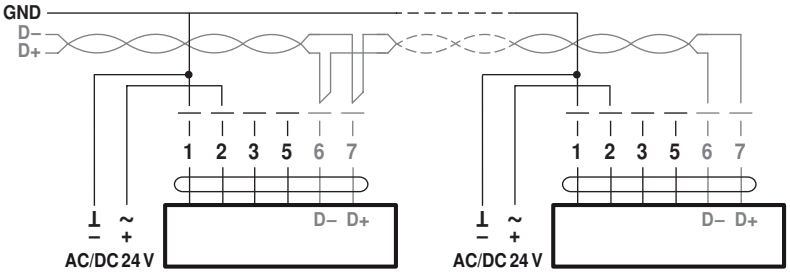

..M(C)24A-MOD ..M(C)24A-MOD

BACnet MS/TP / Modbus RTU

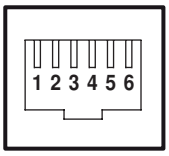

1 AC/DC 24 V
2 GND
3 D– (A)
4 D+ (B)
5 AC/DC 24 V
6 GND

..M24A-MOD-J6

BACnet MS/TP / Modbus RTU / analog

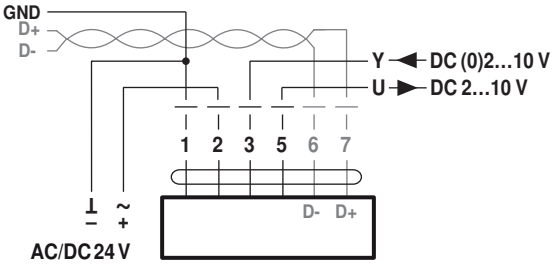

..M(C)24A-MOD

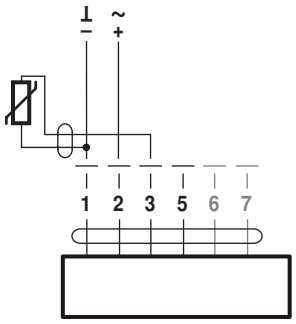

..LON / ..-MOD / ..-KNX

Ni1000	–28...+98°C	850...1600 Ω [2]
PT1000	–35...+155°C	850...1600 Ω [2]
NTC	–10...+160°C [1]	200 Ω...60 kΩ [2]

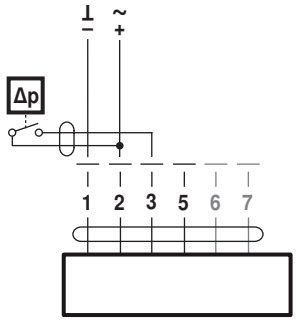

..LON / ..-MOD / ..-KNX

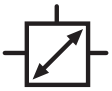

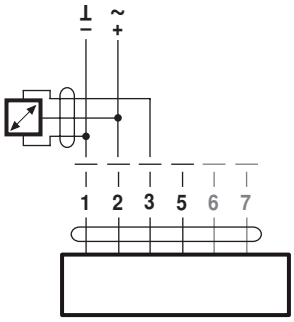

..LON / ..-MOD / ..-KNX