Damper actuator in the IP66/67 protective housing for adjusting dampers in HVAC plants, comparable industrial plants and technical building installations

- Air damper size up to approx. 3.2 m²
- Torque motor 16 Nm
- Nominal voltage AC/DC 24 V
- Control modulating 2...10 V
- Position feedback 2...10 V
- Running time motor 7 s
- Optimum weather protection for use outdoors (for use in ambient temperatures up to –40°C, there is a separate actuator available with built-in heater)

Picture may differ from product

Technical data

Electrical data	Nominal voltage	AC/DC 24 V
	Nominal voltage frequency	50/60 Hz
	Nominal voltage range	AC 19.2...28.8 V / DC 21.6...28.8 V
	Power consumption in operation	15 W
	Power consumption in rest position	2 W
	Power consumption for wire sizing	26 VA
	Inrush current (Imax)	20.0 A @ 5 ms
	Connection supply / control	Cable 1 m, 4x 0.75 mm² (halogen-free)
	Parallel operation	Yes (note the performance data)
Functional data	Torque motor	16 Nm
	Operating range Y	2...10 V
	Input impedance	100 kΩ
	Position feedback U	2...10 V
	Position feedback U note	Max. 0.5 mA
	Position accuracy	±5%
	Direction of motion motor	selectable with switch 0/1
	Direction of motion note	Y = 0 V: At switch position 0 (ccw rotation) / 1 (cw rotation)
	Manual override	with push-button, can be locked (under protective housing)
	Angle of rotation	Max. 95°
	Angle of rotation note	can be limited on both sides with adjustable mechanical end stops
	Minimum angle of rotation	Min. 30°
	Running time motor	7 s / 90°
	Sound power level, motor	63 dB(A)
	Adaptation setting range	manual (automatic on first power-up)
	Mechanical interface	Universal shaft clamp 12...26.7 mm
	Position indication	Mechanical, pluggable
Safety data	Protection class IEC/EN	III, Safety Extra-Low Voltage (SELV)
	Power source UL	Class 2 Supply
	Degree of protection IEC/EN	IP66/67
	Degree of protection NEMA/UL	NEMA 4X
	Housing	UL Enclosure Type 4X
	EMC	CE according to 2014/30/EU

Technical data

Safety data	Low voltage directive	CE according to 2006/95/EC
	Certification IEC/EN	IEC/EN 60730-1 and IEC/EN 60730-2-14
	UL Approval	cULus according to UL60730-1A, UL60730-2-14 and CAN/CSA E60730-1 The UL marking on the actuator depends on the production site, the device is UL-compliant in any case
	Type of action	Type 1
	Rated impulse voltage supply / control	0.8 kV
	Pollution degree	4
	Ambient humidity	Max. 100% RH
	Ambient temperature	-30...40°C [-22...104°F]
	Ambient temperature note	Caution: 40...50°C [104...122°F] utilisation possible only under certain restrictions. Please contact your supplier.
	Storage temperature	-40...80°C [-40...176°F]
	Servicing	maintenance-free
Weight	Weight	3.6 kg

Safety notes

- This device has been designed for use in stationary heating, ventilation and air-conditioning systems and must not be used outside the specified field of application, especially in aircraft or in any other airborne means of transport.
- Only authorised specialists may carry out installation. All applicable legal or institutional installation regulations must be complied with during installation.
- Junction boxes must at least correspond with housing IP degree of protection!
- The cover of the protective housing may be opened for adjustment and servicing. When it is closed afterwards, the housing must seal tight (see installation instructions).
- The device may only be opened at the manufacturer's site. It does not contain any parts that can be replaced or repaired by the user.
- The cables must not be removed from the device installed in the interior.
- Self adaptation is necessary when the system is commissioned and after each adjustment of the angle of rotation (press the adaptation push-button once).
- To calculate the torque required, the specifications supplied by the damper manufacturers concerning the cross-section and the design, as well as the installation situation and the ventilation conditions must be observed.
- The device contains electrical and electronic components and must not be disposed of as household refuse. All locally valid regulations and requirements must be observed.
- The device is not designed for applications where chemical influences (gases, fluids) are present or for utilisation in corrosive environments in general.
- The actuator may not be used in plenary applications (e.g. suspended ceilings or raised floors).
- The materials used may be subject to external influences (temperature, pressure, construction fastening, effect of chemical substances, etc.), which cannot be simulated in laboratory tests or field trials. In case of doubt, we definitely recommend that you carry out a test. This information does not imply any legal entitlement. Belimo will not be held liable and will provide no warranty.
- Flexible metallic cable conduits or threaded cable conduits of equal value are to be used for UL (NEMA) Type 4X applications.
- When used under high UV loads, e.g. extreme sunlight, the use of flexible metallic or equivalent cable conduits is recommended.

Product features

Fields of application

The actuator is particularly suitable for utilisation in outdoor applications and is protected against the following weather conditions:
- UV radiation
- Rain / Snow
- Dirt / Dust
- Air humidity
- Alternating climate / frequent and severe temperature fluctuations (Recommendation: use the actuator with integrated factory-installed heating which can be ordered separately to prevent internal condensation)

Operating mode

The actuator is controlled with a control signal Y (note the operating range) and drives to the position defined by the control signal. Measuring voltage U serves for the electrical display of the damper position 0...100% and as control signal for other actuators.

Simple direct mounting

Simple direct mounting on the damper shaft with a universal shaft clamp, supplied with an anti-rotation mechanism to prevent the actuator from rotating.

Manual override

Manual override with push-button possible (the gear train is disengaged for as long as the button is pressed or remains locked).

The housing cover must be removed for manual override.

Adjustable angle of rotation

Adjustable angle of rotation with mechanical end stops. A minimum permissible angle of rotation of 30° must be allowed for. The housing cover must be removed to set the angle of rotation.

High functional reliability

The actuator is overload protected, requires no limit switches and automatically stops when the end stop is reached.

Home position

The first time the supply voltage is switched on, i.e. at the time of commissioning, the actuator carries out an adaptation, which is when the operating range and position feedback adjust themselves to the mechanical setting range.

The detection of the mechanical end stops enables a gentle approach to the end positions, thus protecting the actuator mechanics.

The actuator then moves into the position defined by the control signal.

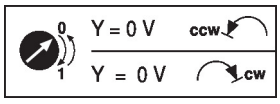

Adaptation and synchronisation

An adaptation can be triggered manually by pressing the "Adaptation" button. Both mechanical end stops are detected during the adaptation (entire setting range). Automatic synchronisation after pressing the manual override button is configured. The synchronisation is in the home position (0%).

The actuator then moves into the position defined by the control signal.

Accessories

Tools

Description	Type
Heater, with mechanical humidistat	HH24-MG
Heater, with adjustable thermostat	HT24-MG
Connecting cable 5 m, A: RJ11 6/4 ZTH EU, B: 6-pin for connection to service socket	ZK1-GEN
Connecting cable 5 m, A: RJ11 6/4 ZTH EU, B: free wire end for connection to MP/PP terminal	ZK2-GEN

Electrical accessories

Description	Type
Auxiliary switch 2x SPDT add-on, grey	S2A GR
Feedback potentiometer 140 Ω add-on	P140A
Feedback potentiometer 1 kΩ add-on	P1000A

Accessories

Description	Type
Feedback potentiometer 10 kΩ add-on	P10000A
Adapter for auxiliary switch and feedback potentiometer, Multipack 20 pcs.	Z-SPA
Signal converter voltage/current 100 kΩ 4...20 mA, Supply AC/DC 24 V	Z-UIC
Positioner for wall mounting	SGA24
Positioner for built-in mounting	SGE24
Positioner for front-panel mounting	SGF24
Positioner for wall mounting	CRP24-B1

Mechanical accessories

Description	Type
Cable gland for cable diameter ø4...10 mm	Z-KB-PG11

Electrical installation

Supply from isolating transformer.

Parallel connection of other actuators possible. Observe the performance data.

Wire colours:
1 = black
2 = red
3 = white
5 = orange

AC/DC 24 V, modulating

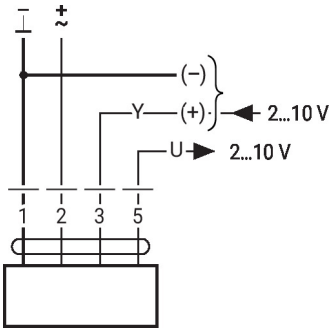

1	2	3		
		2 V		
		10 V		

Signal cable lengths

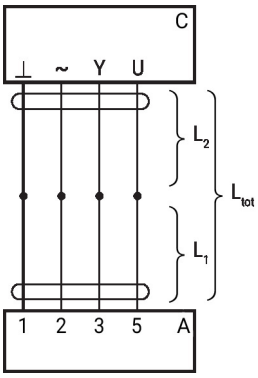

L_2 ⊥ / ~	$L_{tot} = L_1 + L_2$ AC	DC
0.75 mm²	≤30 m	≤5 m
1.00 mm²	≤40 m	≤8 m
1.50 mm²	≤70 m	≤12 m
2.50 mm²	≤100 m	≤20 m

A = Actuator
C = Control unit (controlling unit)
L1 = Connecting cable of the actuator
L2 = Customer cable
Ltot = Maximum signal cable length

Note:
When several actuators are connected in parallel, the maximum signal cable length must be divided by the number of actuators.

Electrical installation

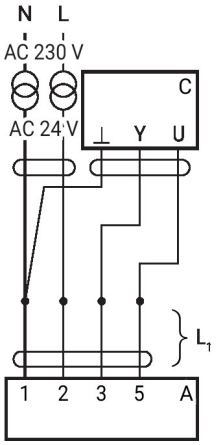

A = Actuator
C = Control unit (controlling unit)
L1 = Connecting cable of the actuator

Note:
There are no special restrictions on installation if the supply and the data cable are routed separately.

Operating controls and indicators

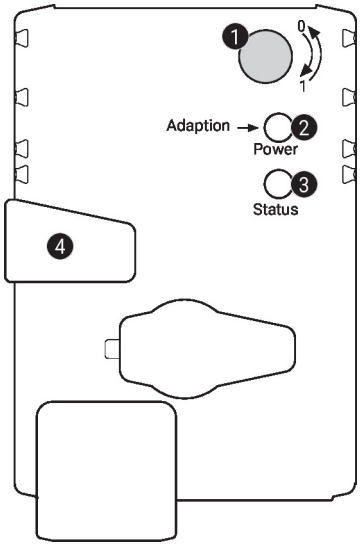

1 Direction of rotation switch

Switch over:	Direction of rotation changes

2 Push-button and LED display green

Off:	No power supply or malfunction
On:	In operation
Press button:	Triggers angle of rotation adaptation, followed by standard mode

3 Push-button and LED display yellow

Off:	Standard mode
On:	Adaptation or synchronisation process active
Press button:	No function

4 Manual override button

Press button:	Gear train disengages, motor stops, manual override possible
Release button:	Gear train engages, synchronisation starts, followed by standard mode

Check power supply connection

2 Off and 3 On	Possible wiring error in power supply

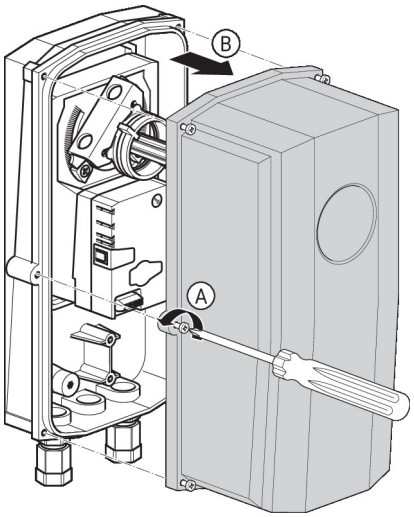

Installation notes

Negative torque	Max. 50% of the torque (Caution: Application possible only with restrictions. Please contact your supplier.)

Dimensions

Spindle length

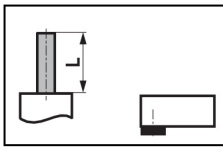	-
	16...75

Clamping range

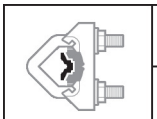		
	12...22	12...18
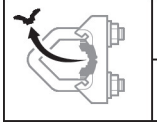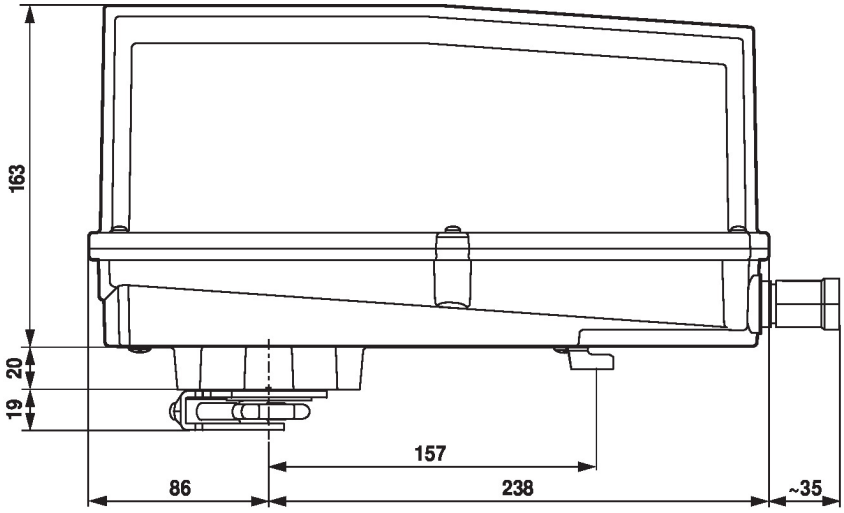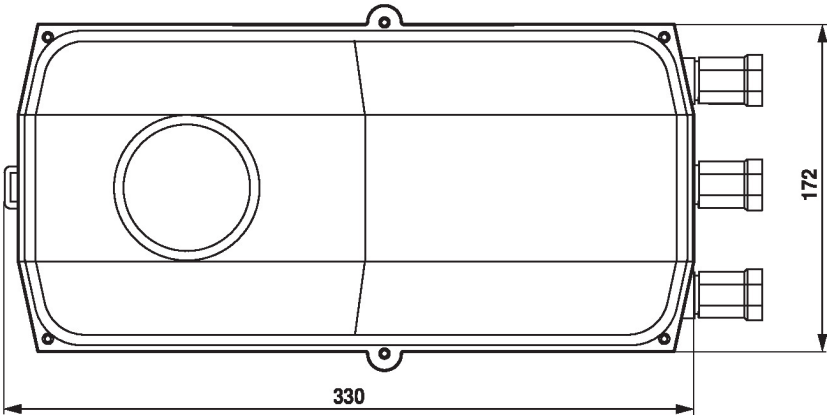		
	22...26.7	12...18