Damper actuator for factory installation in an equipment in technical building installations

- Air damper size up to approx. 0.2 m²
- Torque motor 1 Nm
- Nominal voltage AC/DC 24 V
- Control Open/close, 3-point
- Mechanical interface Form fit 8x8 mm
- with plug

Picture may differ from product

Technical data

Electrical data	Nominal voltage	AC/DC 24 V
	Nominal voltage frequency	50/60 Hz
	Nominal voltage range	AC 19.2...28.8 V / DC 19.2...28.8 V
	Power consumption in operation	1 W
	Power consumption in rest position	0.5 W
	Power consumption for wire sizing	2 VA
	Connection supply / control	Connector plug (Cable-side connector socket not included in scope of delivery)
	Connection plug	Molex Mini-Fit Jr. 39303035
	Parallel operation	Yes (note the performance data)
Functional data	Torque motor	1 Nm
	Direction of motion motor	clockwise rotation
	Direction of motion note	See “Electrical installation” (table in wiring diagrams)
	Manual override	No
	Angle of rotation	0...287.5°
	Angle of rotation note	can be limited by adjustable mechanical end stop 315° with one end stop clip mounted on the actuator Without limitation: endless
	Running time motor	22 s / 90°
	Sound power level, motor	35 dB(A)
	Mechanical interface	Form fit 8x8 mm
	Position indication	No
Safety data	Protection class IEC/EN	III, Safety Extra-Low Voltage (SELV)
	Power source UL	Class 2 Supply
	Degree of protection IEC/EN	IP20
	Degree of protection NEMA/UL	NEMA 1
	Housing	UL Enclosure Type 1
	EMC	CE according to 2014/30/EU
	Certification IEC/EN	IEC/EN 60730-1 and IEC/EN 60730-2-14
	UL Approval	cURus according to UL60730-1A, UL60730-2-14 and CAN/CSA E60730-1

Technical data

Safety data	Hygiene test	According to VDI 6022 Part 1 / SWKI VA 104-01, cleanable and disinfectable, low emission
	Type of action	Type 1
	Rated impulse voltage supply / control	0.8 kV
	Pollution degree	2
	Ambient humidity	Max. 95% RH, non-condensing
	Ambient temperature	-30...50°C [-22...122°F]
	Storage temperature	-40...80°C [-40...176°F]
	Servicing	maintenance-free
Weight	Weight	0.09 kg

Safety notes

- This device has been designed for use in stationary heating, ventilation and air-conditioning systems and must not be used outside the specified field of application, especially in aircraft or in any other airborne means of transport.
- The device is not designed for applications where chemical influences (gases, fluids) are present or for utilisation in corrosive environments in general.
- The device is considered a component and intended for installation in an equipment at the factory. The required protection against accidental contact with live parts must be provided by the damper or system manufacturer.
- Only authorised specialists may carry out installation. All applicable legal or institutional installation regulations must be complied with during installation.
- The device may only be opened at the manufacturer's site. It does not contain any parts that can be replaced or repaired by the user.
- The plug connections may only be used according to the installation instructions. The Molex plug connection has a mandatory locking mechanism that prevents unintentional disconnection. Operating the locking mechanism and the entire plug connection under voltage is not permitted.
- To calculate the torque required, the specifications supplied by the damper manufacturers concerning the cross-section and the design, as well as the installation situation and the ventilation conditions must be observed.
- The device contains electrical and electronic components and must not be disposed of as household refuse. All locally valid regulations and requirements must be observed.

Product features

Simple direct mounting

The actuator with its hollow shaft is mounted in a form-fit manner directly on the damper shaft and then secured with the anti-rotation clip, to prevent it from rotating.

The anti-rotation clip Z-ARCM is not included in the scope of delivery.

Adjustable angle of rotation

Adjustable angle of rotation with mechanical end stops.

High functional reliability

The actuator is overload protected, requires no limit switches and automatically stops when the end stop is reached.

Restriction 3-point controller

- For applications with 3-point control (open loop), a minimum pulse length of 1 s is recommended to increase position accuracy.

- For applications with 3-point control (closed loop), a pulse length of 0.5 s is possible to reduce oscillation.

Parts included

End stop clip

Accessories

Mechanical accessories	Description	Type
	Anti-rotation clip, Multipack 20 pcs.	Z-ARCM
	End stop clip, Multipack 20 pcs.	Z-ESCM
	Protective covering, Multipack 20 pcs.	Z-PCUM

Electrical installation

Supply from isolating transformer.

Parallel connection of other actuators possible. Observe the performance data.

Cable-side connector socket is not included in scope of delivery

The plug connections may only be used according to the installation instructions. The Molex plug connection has a mandatory locking mechanism that prevents unintentional disconnection. Operating the locking mechanism and the entire plug connection under voltage is not permitted.

AC/DC 24 V, open/close

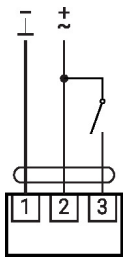

AC/DC 24 V, 3-point

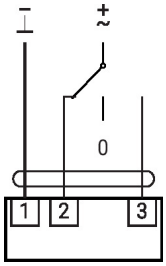

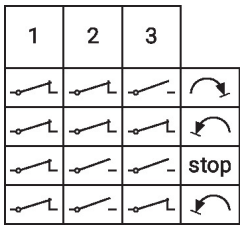

Molex PN 39014030 / 39000039 (0.5...1.0 mm²)

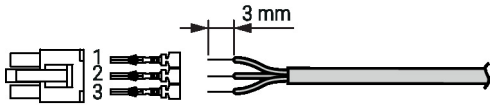

Dimensions

Spindle length

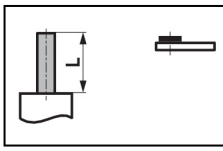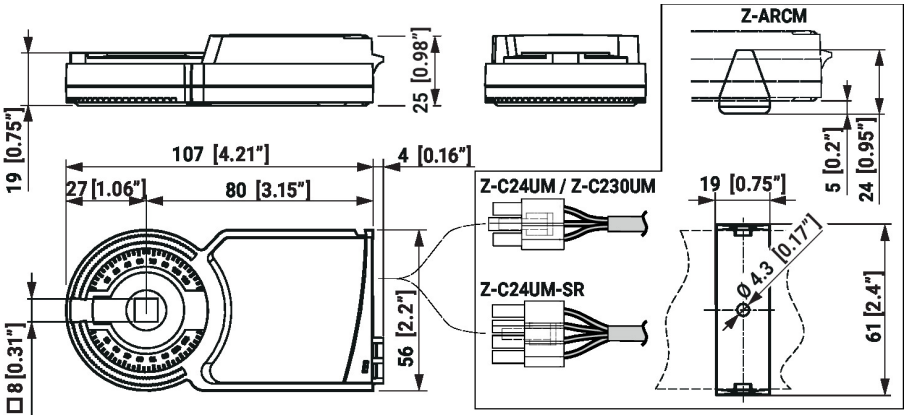	Min. 25
	-