PI Zone Valve, 6-way, Internal thread, PN 16

- Nominal voltage AC/DC 24 V
- Control modulating, communicative, hybrid
- For closed water systems
- Switching or modulating control on the water side of thermal heating/cooling elements
- Two sequences (cooling/heating), changeover with 6-way characterised control valve
- Pressure-independent flow control by 2-way PI zone valve (PIQCV)
- Communication via BACnet MS/TP, Modbus RTU, Belimo-MP-Bus or conventional control

Picture may differ from product

Type Overview

Type	DN	Rp ["]	V'nom [l/h]	V'max [l/h]	V'nom [m³/h]	PN
C615QP-B+BAC	15	1/2	210	40...210	0.21	16
C615QP-D+BAC	15	1/2	420	100...420	0.42	16
C615QP-F+BAC	15	1/2	980	190...980	0.98	16
C620QPT-G+BAC	20	3/4	2100	600...2100	2.1	16

Technical data

Electrical data	Nominal voltage	AC/DC 24 V
	Nominal voltage frequency	50/60 Hz
	Nominal voltage range	AC 19.2...28.8 V / DC 21.6...28.8 V
	Power consumption in operation	2.1 W
	Power consumption in rest position	1.9 W
	Power consumption for wire sizing	4.6 VA
	Connection supply / control	Cable 1 m, 6x 0.75 mm²
	Parallel operation	Yes (note the performance data)
	Cable length	1 m
Data bus communication	Communicative control	BACnet MS/TP Modbus RTU MP-Bus
	Number of nodes	BACnet / Modbus see interface description MP-Bus max. 8
Functional data	Operating range Y	2...10 V
	Input impedance	100 kΩ
	Operating range Y variable	0.5...10 V
	Position feedback U	2...10 V
	Position feedback U note	Max. 1 mA
	Position feedback U variable	0.5...10 V
	Sound power level motor	35 dB(A)
	Fluid	Water, water with glycol up to max. 50% vol.
	Fluid temperature	6...80°C [43...176°F]
	Differential pressure Δpmax	350 kPa
	Flow characteristic	linear

Technical data

Functional data	Pressure stability	±5% with a pressure value of 35...350 kPa across the PIQCV ±10% with a pressure value of 16...35 kPa across the PIQCV
	Leakage rate	air-bubble tight, leakage rate A (EN 12266-1)
	Angle of rotation note	with room controller CRK24-B1 compelling sequence 1 = cooling and sequence 2 = heating
	Pipe connection	Internal thread according to ISO 7-1
	Installation orientation	upright to horizontal (in relation to the spindle)
	Servicing	maintenance-free
Safety data	Protection class IEC/EN	III, Safety Extra-Low Voltage (SELV)
	Degree of protection IEC/EN	IP40
	Pressure equipment directive	CE according to 2014/68/EU
	EMC	CE according to 2014/30/EU
	Type of action	Type 1
	Rated impulse voltage supply / control	0.8 kV
	Pollution degree	2
	Ambient humidity	Max. 95% RH, non-condensing
	Ambient temperature	5...40°C [41...104°F]
	Storage temperature	-40...80°C [-40...176°F]
Materials	Valve body	Nickel-plated brass body (6-way CCV) / Brass (PIQCV)
	Closing element	chrome-plated brass (6-way CCV) / stainless steel (PIQCV)
	Spindle	chrome-plated brass (6-way CCV) / stainless steel (PIQCV)
	Spindle seal	EPDM O-ring
	Seat	PTFE, O-ring EPDM
	Diaphragm	EPDM

Safety notes

- This device has been designed for use in stationary heating, ventilation and air-conditioning systems and must not be used outside the specified field of application, especially in aircraft or in any other airborne means of transport.
- Only authorised specialists may carry out installation. All applicable legal or institutional installation regulations must be complied with during installation.
- The device contains electrical and electronic components and must not be disposed of as household refuse. All locally valid regulations and requirements must be observed.

Product features

Operating mode

The HVAC performance device consists of two components: 6-way changeover ball valve with actuator and mechanical pressure-independent 2-way zone valve (PIQCV) with actuator. The set maximum flow rates for sequence 1 (V'max1) and sequence 2 (V'max2) are assigned to the control signal as follows:

• 2 V/0% = 100% for sequence 1

• 10 V/100% = 100% for sequence 2

The actuator can be controlled via an analogue signal or over the communications bus. According to the control signal, the cooling or heating sequence is activated by switching over at the 6-way changeover ball valve. Furthermore, the pressure-independent 2-way zone valve ensures the water quantity required by the control signal for cooling or heating operation.

A constant flow rate will be achieved with a differential pressure of 16...350 kPa across the PIQCV, thanks to the integrated pressure regulating valve. A valve authority of 1 is achieved regardless of the differential pressure across the pressure-independent 2-way zone valve. Even with pressure fluctuations and in partial load conditions, the flow rate remains constant at the respective demand and ensures stable control.

V'nom is the maximum possible flow. (V'nom=V'nom1=V'nom2)

V'max1 is the maximum flow which has been set with the smallest control signal, 2 V / 0%.

V'max2 is the maximum flow which has been set with the highest control signal, 10 V / 100%.

V'max1 and V'max2 can be set within the V'max values listed on page 1.

V'min 0% (non-variable).

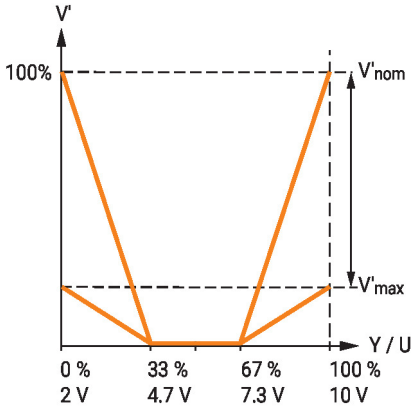

Configurable device

The factory settings cover the most common applications.

Hydronic balancing

With the ZTH EU and Belimo Assistant 2, the maximum flow rates of sequence 1 and sequence 2 can be adjusted individually on-site in a few simple reliable steps.

Combination analogue - communicative (hybrid mode)

With conventional control by means of an analogue control signal, BACnet or Modbus can be used for the communicative position feedback.

Manual override

Manual adjustment is possible on the 6-way changeover ball valve, with a push-button (gear train disengagement as long as the button is pressed or remains locked). On the 2-way PI zone valve (PIQCV), manual adjustment is possible by unclicking the actuator and rotating it to turn the valve spindle.

High functional safety

The actuator is overload protected, requires no limit switches and automatically stops when the end stop is reached.

Feedback signal

Regardless of the setting of the control mode, the feedback signal U5 is always assigned to the flow V'max1 and V'max2.

Product features

Pressure compensation

With combined thermal heating/cooling elements, the fluid is enclosed in the element (e.g. ceiling, coil) when the valve is closed (no heating or cooling). If the fluid temperature changes due to the ambient temperature, the pressure of the enclosed fluid can increase or decrease.

If the 6-way PI zone valve does not receive a cooling or heating request

- the 2-way PI zone valve (PIQCV) is closed. Thanks to the air-bubble tight shut-off, no water flow is possible through the cooling/heating element;

- the 6-way changeover valve remains open in the last used sequence. Compensation of pressure changes is thus possible at any time via the open port.

Accessories

Tools

Description	Type
Service tool for wired and wireless setup, on-site operation and troubleshooting.	Belimo Assistant 2
Service tool, with ZIP-USB function, for configurable and communicative Belimo actuators, VAV controller and HVAC performance devices	ZTH EU
Belimo Assistant Link Bluetooth and USB to NFC and MP-Bus converter for configurable and communicative devices	LINK.10

Mechanical accessories

Description	Type
Elbow 90° male/female DN 15 Rp 1/2", R 1/2", Set of 2 pcs.	P2P15PE-1GE
Elbow 90° male/female DN 20 Rp 3/4", R 3/4", Set of 2 pcs.	P2P20PF-1GE
Fixing bracket for 6-way valve DN 15/20	ZR-004
Pipe connector for ball valve with internal thread DN 15 Rp 1/2"	ZR2315
Pipe connector for ball valve with internal thread DN 20 Rp 3/4"	ZR2320

Electrical installation

Supply from isolating transformer.

Parallel connection of other actuators possible. Observe the performance data.

The wiring of the line for BACnet MS/TP / Modbus RTU is to be carried out in accordance with applicable RS-485 regulations.

Modbus / BACnet: Supply and communication are not galvanically isolated. COM and ground of the devices must be connected to each other.

Wire colours:
1 = black
2 = red
3 = white
5 = orange
6 = pink
7 = grey

Functions:
C1 = D- (wire 6)
C2 = D+ (wire 7)

AC/DC 24 V, modulating

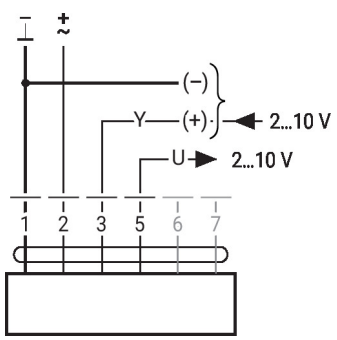

MP-Bus

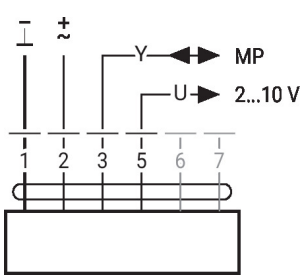

BACnet MS/TP / Modbus RTU

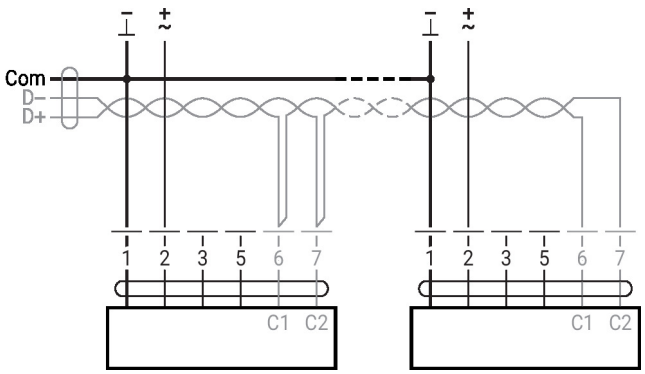

Electrical installation

Modbus RTU / BACnet MS/TP with analogue setpoint (hybrid operation)

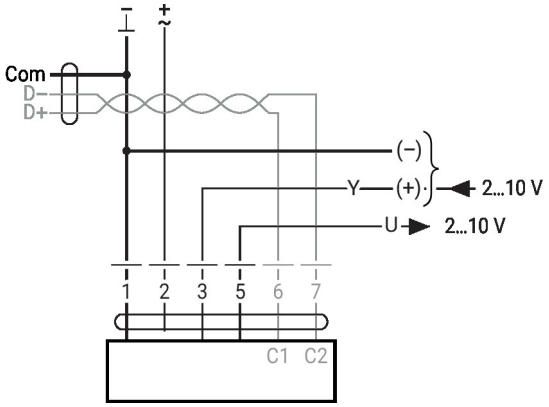

Operating controls and indicators

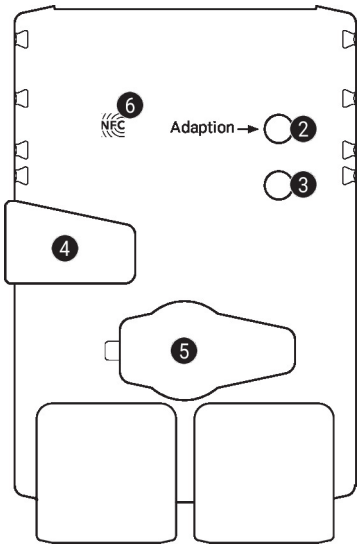

2 Push-button and LED display green

Off:	No power supply or malfunction
On:	In operation
Press button:	Triggers angle-of-rotation adaptation, followed by standard mode

3 Push-button and LED display yellow

Off:	Standard mode
On:	Adaptation or synchronisation process active
Flickering:	BACnet / Modbus communication active
Press button:	No function

4 Manual override button

Press button:	Gear train disengages, motor stops, manual override possible
Release button:	Gear train engages, standard mode

5 Service plug
For connecting configuration and service tools

5 NFC logo
Operated with Belimo Assistant 2

Installation notes

Permissible installation orientation

The ball valve can be installed upright to horizontal. The ball valve may not be installed in a hanging position, i.e. with the spindle pointing downwards.

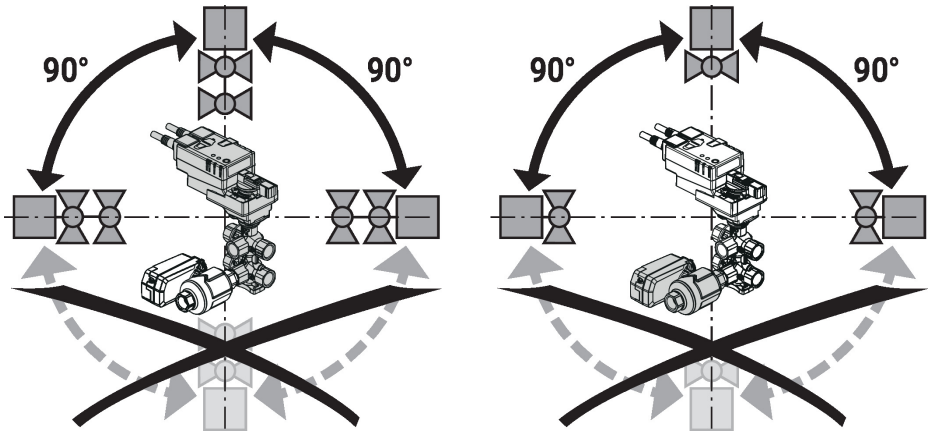

Water quality requirements

The water quality requirements specified in VDI 2035 must be adhered to.

Belimo valves are regulating devices. For the valves to function correctly in the long term, they must be kept free from particle debris (e.g. welding beads during installation work). The installation of a suitable strainer is recommended.

Servicing

Ball valves, rotary actuators and sensors are maintenance-free.

Before any service work on the control element is carried out, it is essential to isolate the rotary actuator from the power supply (by unplugging the electrical cable if necessary). Any pumps in the part of the piping system concerned must also be switched off and the appropriate slide valves closed (allow all components to cool down first if necessary and always reduce the system pressure to ambient pressure level).

The system must not be returned to service until the ball valve and the rotary actuator have been correctly reassembled in accordance with the instructions and the pipeline has been refilled by professionally trained personnel.

Flow direction

6-way characterised control valve

The flow direction must be observed. The position of the ball can be identified from the L-marking on the spindle.

Flow sequence 1 and sequence 2

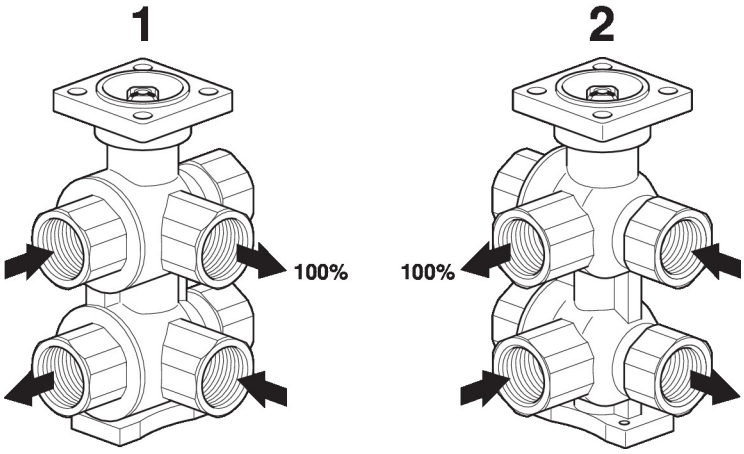

PI zone valve (PIQCV)

The direction of flow, specified by an arrow on the housing, is to be complied with, since otherwise the ball valve could become damaged. Please ensure that the ball is in the correct position (marking on the spindle).

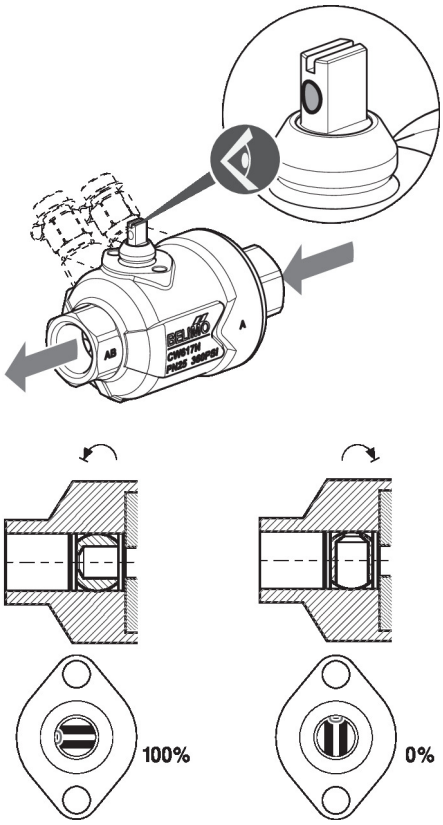

Installation notes

Valve characteristic curve

The lower diagram shows the flow characteristic depending on the control signal.

Valve characteristic curve

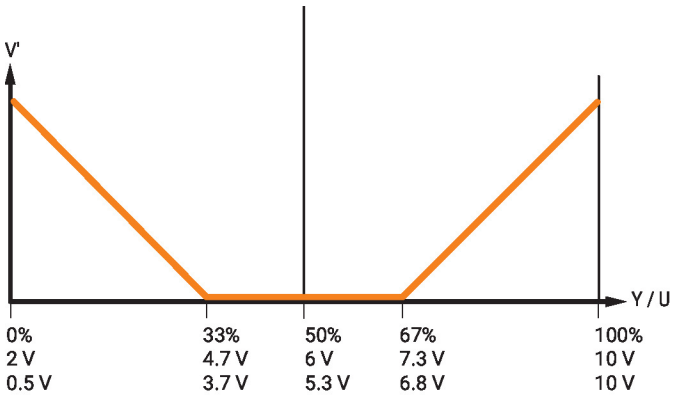

Types of installation

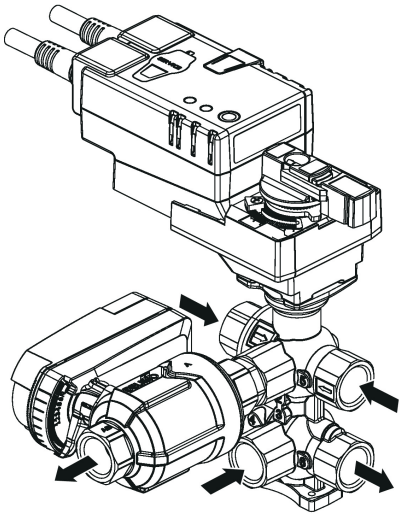

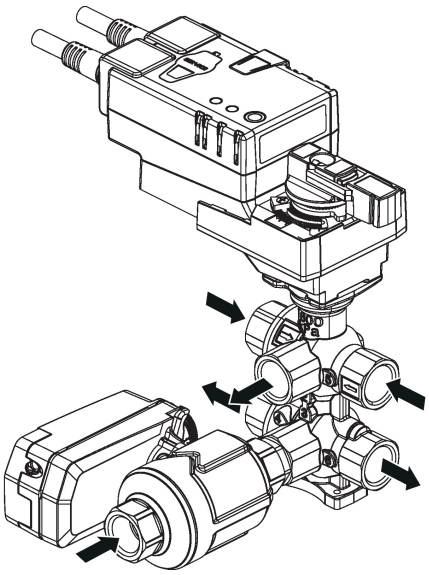

Variant with accessory P2P..-1GE for minimum installation height H: DN 15 = 116 mm; DN 20 = 128 mm

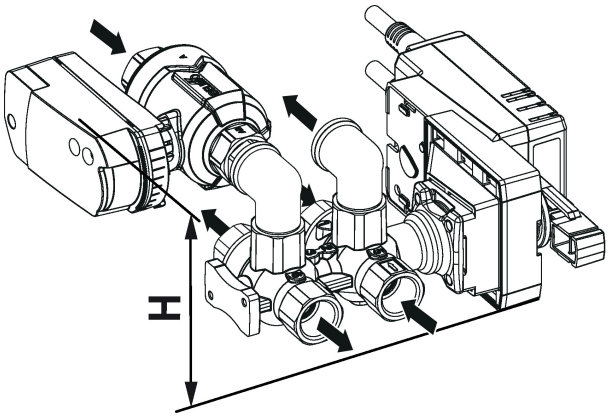

General notes

Valve selection

The valve is determined using the maximum required flow rate V'max.

A calculation of the Kvs value is not required.

V'max = 5...100% of V'nom

Minimum differential pressure (pressure drop)

The minimum required differential pressure (pressure drop across both valves) to achieve the desired flow V'max can be determined using the Kvs value of the 6-way characterised control valve (see table below) and the flow-independent minimum required differential pressure across the 2-way PI zone valve (PIQCV). The calculated value depends on the required maximum flow V'max. Higher differential pressures are automatically compensated.

Formula

$$\Delta p_{min} = 100 \times \left(\frac{V'_{max}}{K_{vs\ 6\text{-}way\ CCV}}\right)^2 + 16$$

Δp_{min}: kPa
V'_{max}: m³/h
$K_{vs\ 6\text{-}way\ CCV}$: m³/h

	$K_{vs\ 6\text{-}way\ CCV}$ m³/h
C615QP-B+BAC	1.8
C615QP-D+BAC	1.8
C615QP-F+BAC	1.8
C620QPT-G+BAC	4.0

Example (C615QP-F+BAC with the desired maximum flow rate = 440 l/h)

C615QP-F+BAC
$K_{vs\ 6\text{-}way\ CCV}$ = 1.8 m³/h
V'_{max} = 440 l/min = 0.44 m³/h

$$\Delta p_{min} = 100 \times \left(\frac{V'_{max}}{K_{vs\ 6\text{-}way\ CCV}}\right)^2 + 16 = 100 \times \left(\frac{0.44\ m^3/h}{1.8\ m^3/h}\right)^2 + 16 = 22\ kPa$$

In the case of different flow rates for the cooling and heating sequences (V'max1 and V'max2), the minimum required differential pressures for both sequences must be determined individually.

Service

Wireless connection

Belimo devices marked with the NFC logo can be operated with Belimo Assistant 2.

Requirement:

- NFC- or Bluetooth-capable smartphone
- Belimo Assistant 2 (Google Play and Apple AppStore)

Align NFC-capable smartphone on the device so that both NFC antennas are superposed.

Connect Bluetooth-enabled smartphone via the Bluetooth-to-NFC converter ZIP-BT-NFC to the device. Technical data and operating instructions are shown in the ZIP-BT-NFC data sheet.

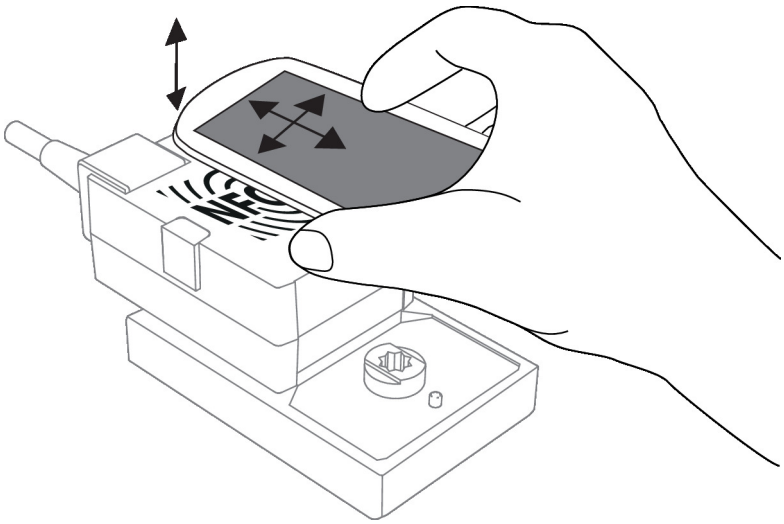

Wired connection

ZTH EU connection / Belimo Assistant 2

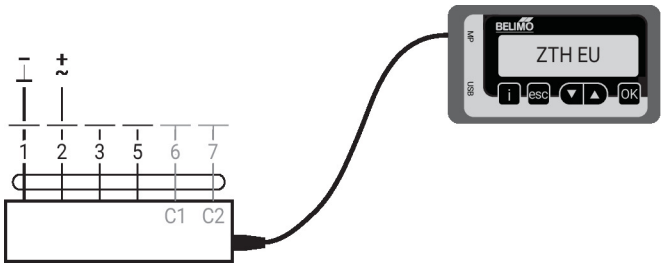

Dimensions

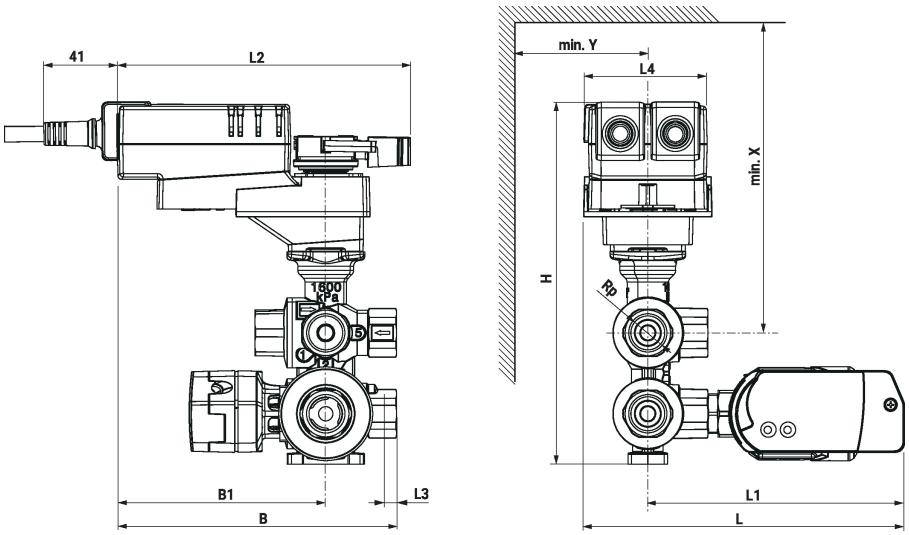

Dimensions

The flow sensor and the pipeline element can also be connected to port 3 (see installation notes).

Type	DN	Rp [“]	L [mm]	L1 [mm]	L2 [mm]	L3 [mm]	L4 [mm]	B [mm]	B1 [mm]	H [mm]	X [mm]	Y [mm]	kg
C615QP-B+BAC	15	1/2	179	143	164	13	69	156	117	202	200	40	2.5
C615QP-D+BAC	15	1/2	179	143	164	13	69	156	117	202	200	40	2.5
C615QP-F+BAC	15	1/2	186	151	164	13	69	156	117	202	200	40	2.9
C620QPT-G+BAC	20	3/4	203	167	164	14	69	167	117	234	230	40	4.6

Further documentation

- General notes for project planning
- Notes for project planning for 6-way characterised control valves
- Overview MP Cooperation Partners
- Tool connections
- Modbus Interface description
- Description Data-Pool Values
- BACnet Interface description
- Introduction to MP-Bus Technology
- Quick Guide – Belimo Assistant 2