M-Bus converter

The M-Bus converter is an MP client and converts the information of the MP-Bus of the thermal energy meters 22PE.. and the Belimo Energy Valve™ EV..R2+.. / EV..R3+.. to M-Bus. As an intelligent connection box, it supplies the connected devices with voltage and integrates them on M-Bus.

Type Overview

Type	Output signal
G-22PEM-A01	M-Bus

Technical data

Electrical data	Nominal voltage	AC/DC 24 V
	Nominal voltage range	AC 19.2...28.8 V / DC 21.6...28.8 V
	Power consumption AC	0.9 VA
	Power consumption DC	0.75 W
	Electrical connection	Pluggable spring loaded terminal block max. 2.5 mm²
	Cable entry	1x cable gland with strain relief ø6...8 mm, 1x cable gland with strain relief 2x ø6 mm, 1x cable gland with strain relief 4x ø6 mm
Safety data	Protection class IEC/EN	III, Safety Extra-Low Voltage (SELV)
	Degree of protection IEC/EN	IP65
	EU Conformity	CE Marking
	Certification IEC/EN	IEC/EN 60730-1
	Quality Standard	ISO 9001
	Pollution degree	2
	Ambient humidity	Max. 95% RH, non-condensing
	Ambient temperature	-30...50°C [-22...122°F]
Materials	Housing	Cover: PC, orange Bottom: PC, orange Seal: NBR70, black UV resistant
	Cable gland	PA6, black

Safety notes

This device has been designed for use in stationary heating, ventilation and air-conditioning systems and must not be used outside the specified field of application. Unauthorised modifications are prohibited. The product must not be used in relation with any equipment that in case of a failure may threaten humans, animals or assets.

Ensure all power is disconnected before installing. Do not connect to live/operating equipment.

Only authorised specialists may carry out installation. All applicable legal or institutional installation regulations must be complied with during installation.

The device contains electrical and electronic components and must not be disposed of as household refuse. All locally valid regulations and requirements must be observed.

Indicators and Operation

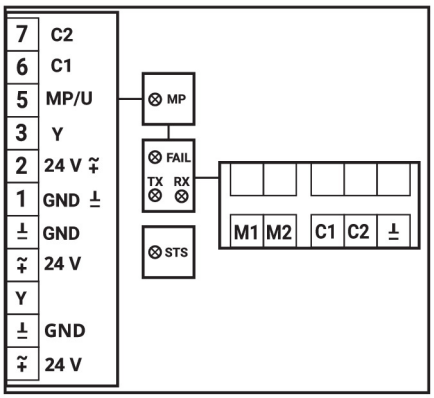

MP (green)

ON: Data are transmitted or received from the MP-Bus

FAIL (red)

ON: M-Bus connection is not present

TX (green)

ON: Data are transmitted to M-Bus network

RX (green)

ON: Data are received from M-Bus network

STS (green), Indicates the current status of the unit

ON:	Ok
OFF:	No power supply
Blinking	MP-Bus device not responding

Installation notes

Procedure for replacing the M-Bus converter G-22PEM-A01

1. Before replacing the unit, all data must be read out from device, as otherwise they will be lost.
2. Replace the existing M-Bus converter with a new one of the same type.
3. The replaced M-Bus converter retains the secondary address, derived from the connected thermal energy meter.
4. Primary address is set to zero (0) by default and must be set again.

Procedure for replacing the thermal energy meter 22PE...

1. Read out the data from the M-Bus converter, as otherwise data will be lost.
2. Replace the existing thermal energy meter with a new one of the same type.
3. Secondary address of the M-Bus converter changes derived from the connected thermal energy meter.
4. Primary address of the M-Bus converter is set to zero (0) as soon as a new thermal energy meter is detected and must be set again.

Parts included

Description	Type
Mounting plate L housing	A-22D-A10
5 pcs. sealing plugs for cable glands Screws Dowels	

Wiring diagram

Supply from isolating transformer.

M-Bus: Supply and control are galvanically isolated.

Wiring of thermal energy meter 22PE.. with M-Bus converter

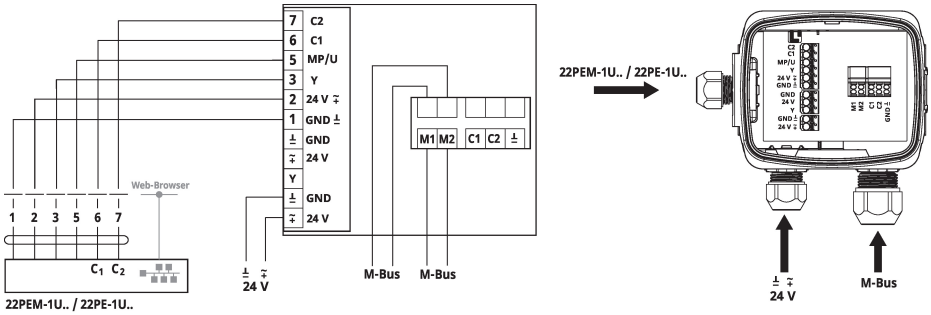

Wiring of Belimo Energy Valve™ EV..R2+.. / EV..R3+.. with M-Bus converter

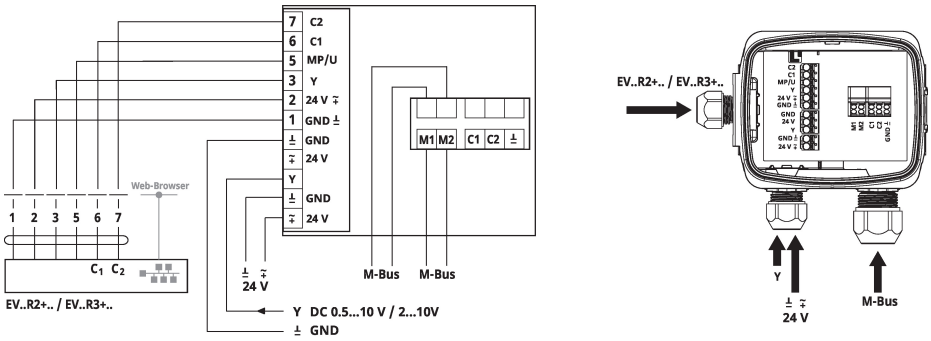

Wiring of thermal energy meter 22PE.. or Belimo Energy Valve™ EV..R2+.. / EV..R3+.. for M-Bus parallel Modbus RTU or BACnet MS/TP

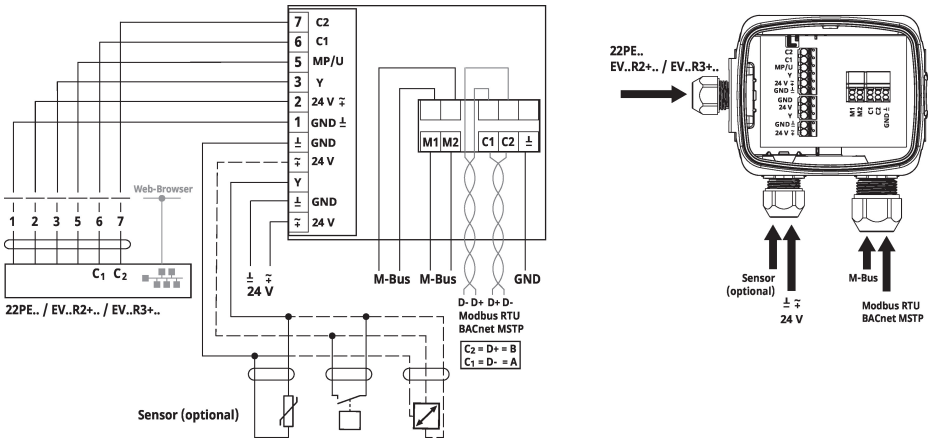

Wiring of thermal energy meter 22PE.. or Belimo Energy Valve™ EV..R2+.. / EV..R3+.. for M-Bus parallel Modbus RTU or BACnet MS/TP (Hybrid)

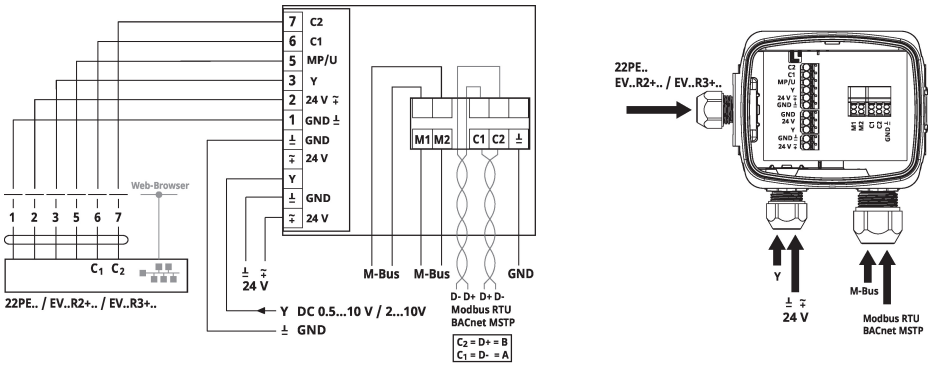

Wiring of thermal energy meter 22PE.. or Belimo Energy Valve™ EV..R2+.. / EV..R3+.. for M-Bus parallel Modbus TCP or BACnet/IP

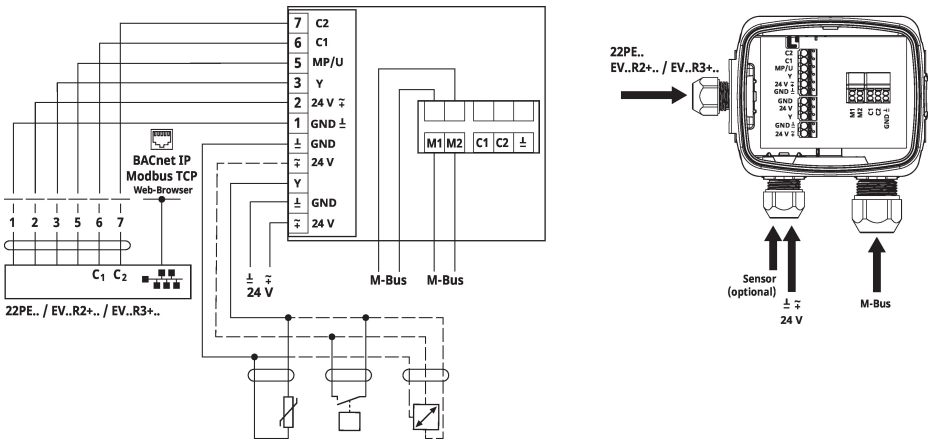

Wiring of thermal energy meter 22PE.. or Belimo Energy Valve™ EV..R2+.. / EV..R3+.. for M-Bus parallel Modbus TCP or BACnet/IP with PoE

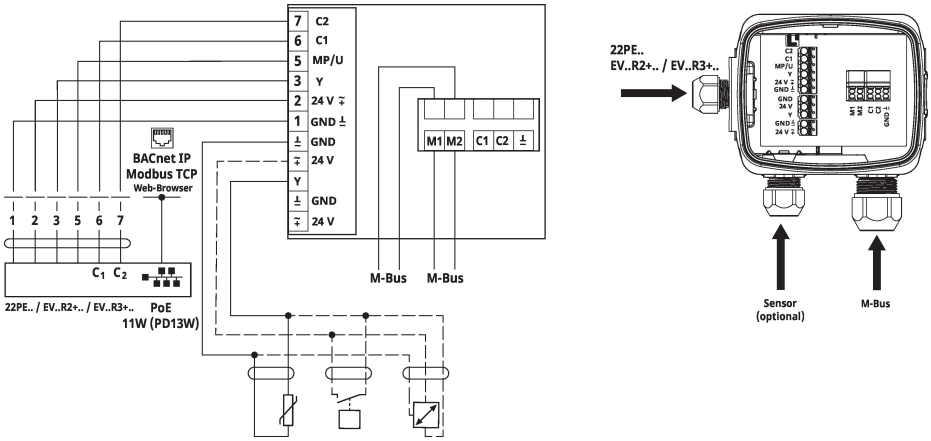

Wiring diagram

Detailed documentation

The thermal energy meters 22PEM-1U.... / 22PE-1U.. or the Belimo Energy Valve™ EV..R2+MID / EV..R2+BAC must be set to MP server by means of the Belimo Assistant App or the web server. The corresponding MP address is PP.

The system integration of the M-Bus converter on M-Bus and the assignment of the M-Bus address is done by means of a commercially available M-Bus tool. Since the M-Bus converter is an MP client, it does not need to be assigned an MP-Bus address.

Protocol

M-Bus: EN 13757-3:2018

MP-Bus A91613-100 Rev. 20 03.12.2019

Baud rate

M-Bus: 300, 600, 1200, 2400, 4800, 9600 Baud

MP-Bus: 1200 Baud

Max. Load

The devices connected to the M-Bus converter may have maximum current consumption of 2 ampere (2A resistive).

M-Bus cable type

H05VV-F2x1mm^2 or equivalent

Dimensions

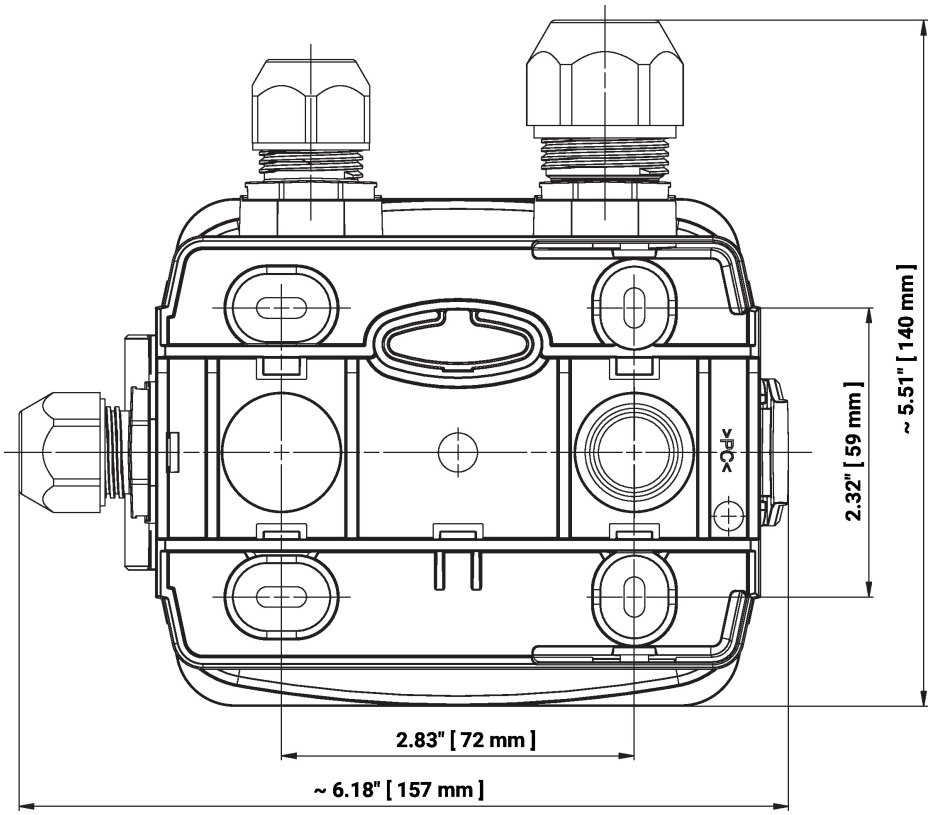

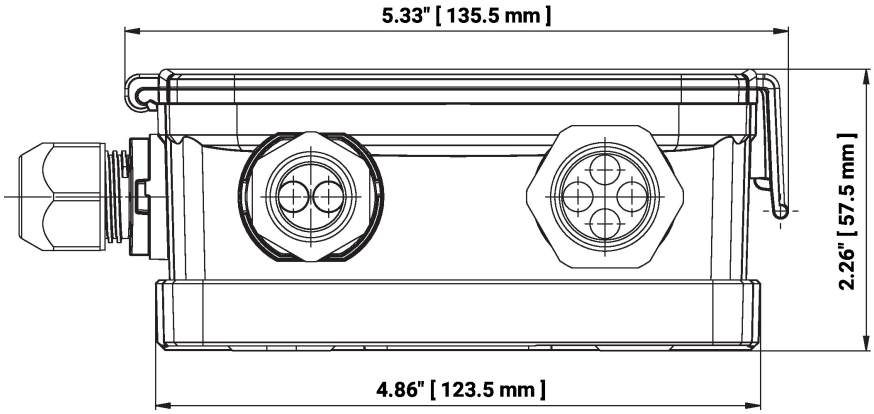

Type	Weight
G-22PEM-A01	0.33 kg