71416-00001.G

1

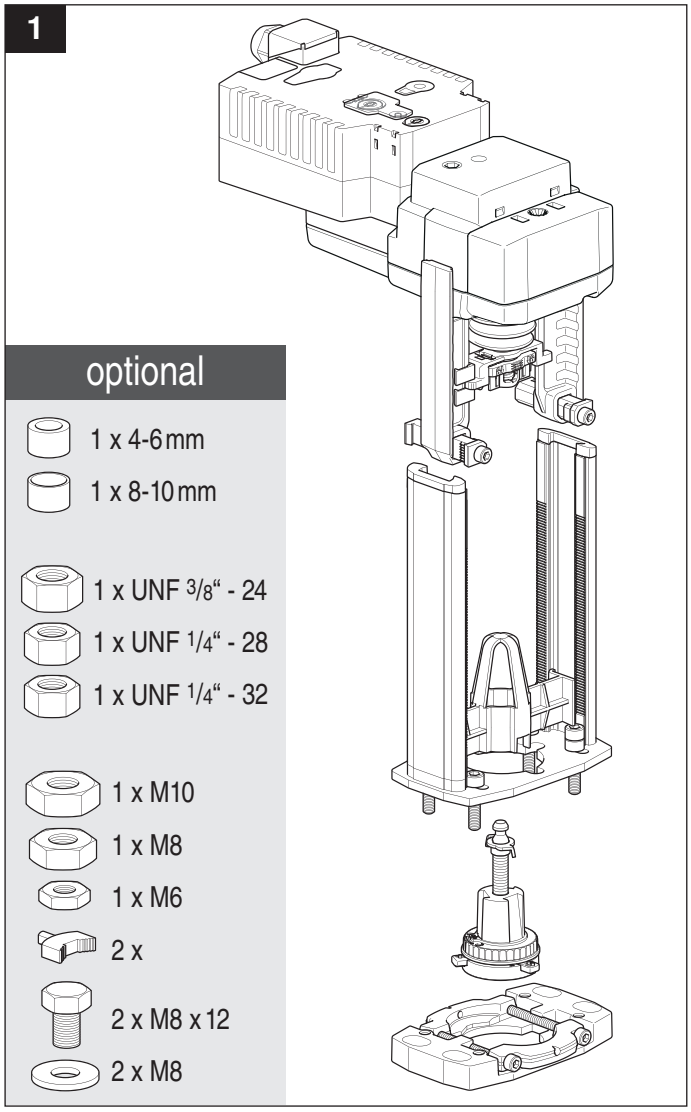

2

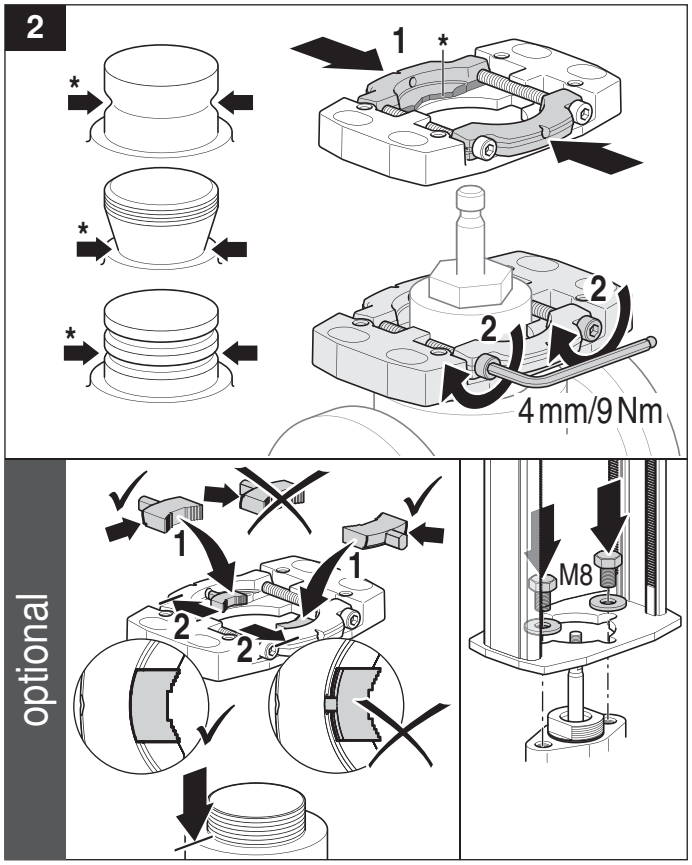

EXTRA	LDM	RV 102 E RV 103 E	ZNV-203
	Sauter	VUG / BUG VQD / BQD VQE / BQE	ZNV-204
	Danfoss	AB-QM (DN 40/100)	ZNV-205

3

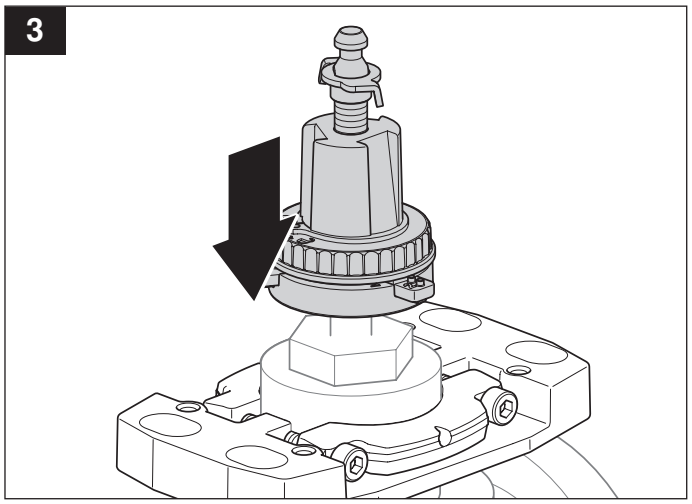

4

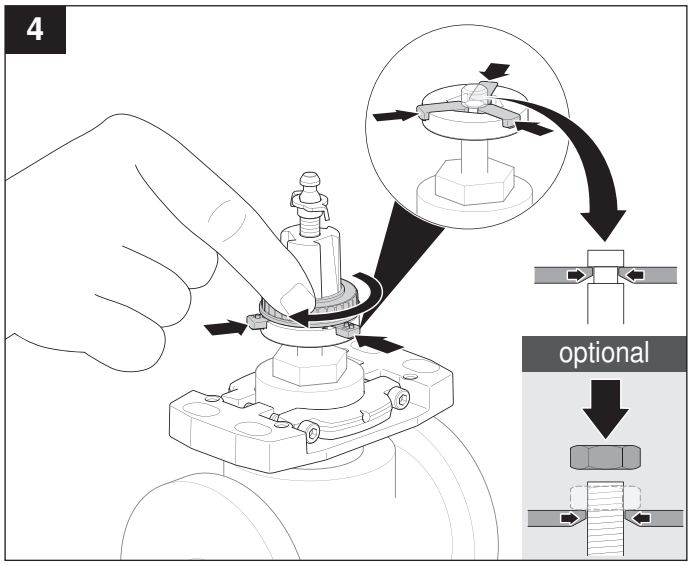

5

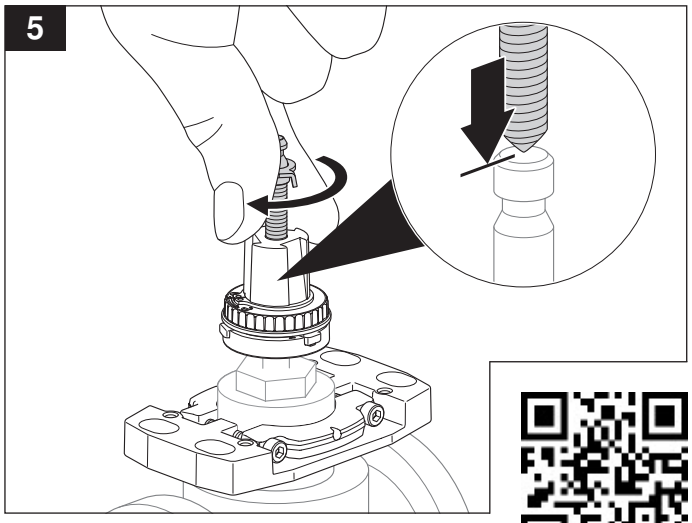

www.belimo.com/safety

6

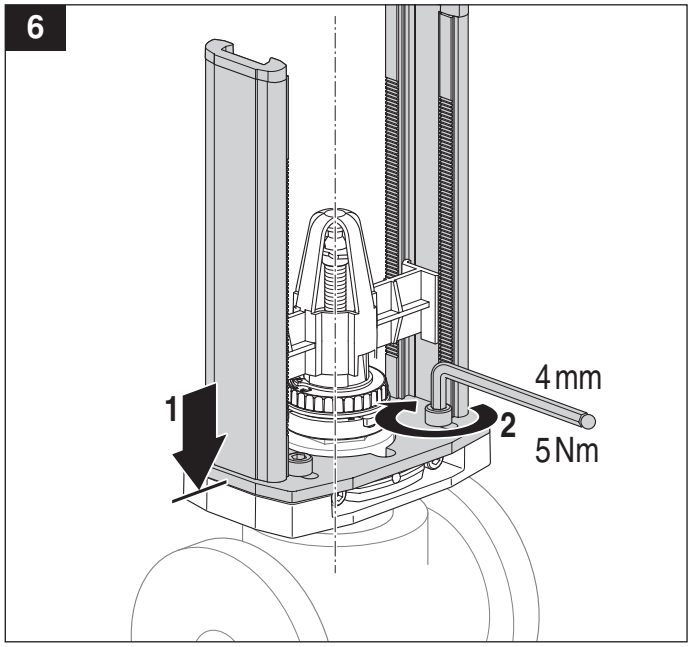

7

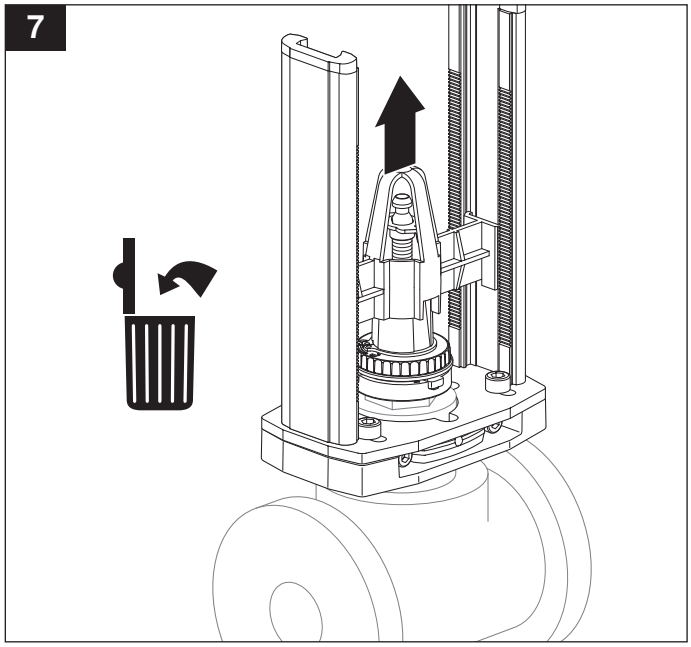

8

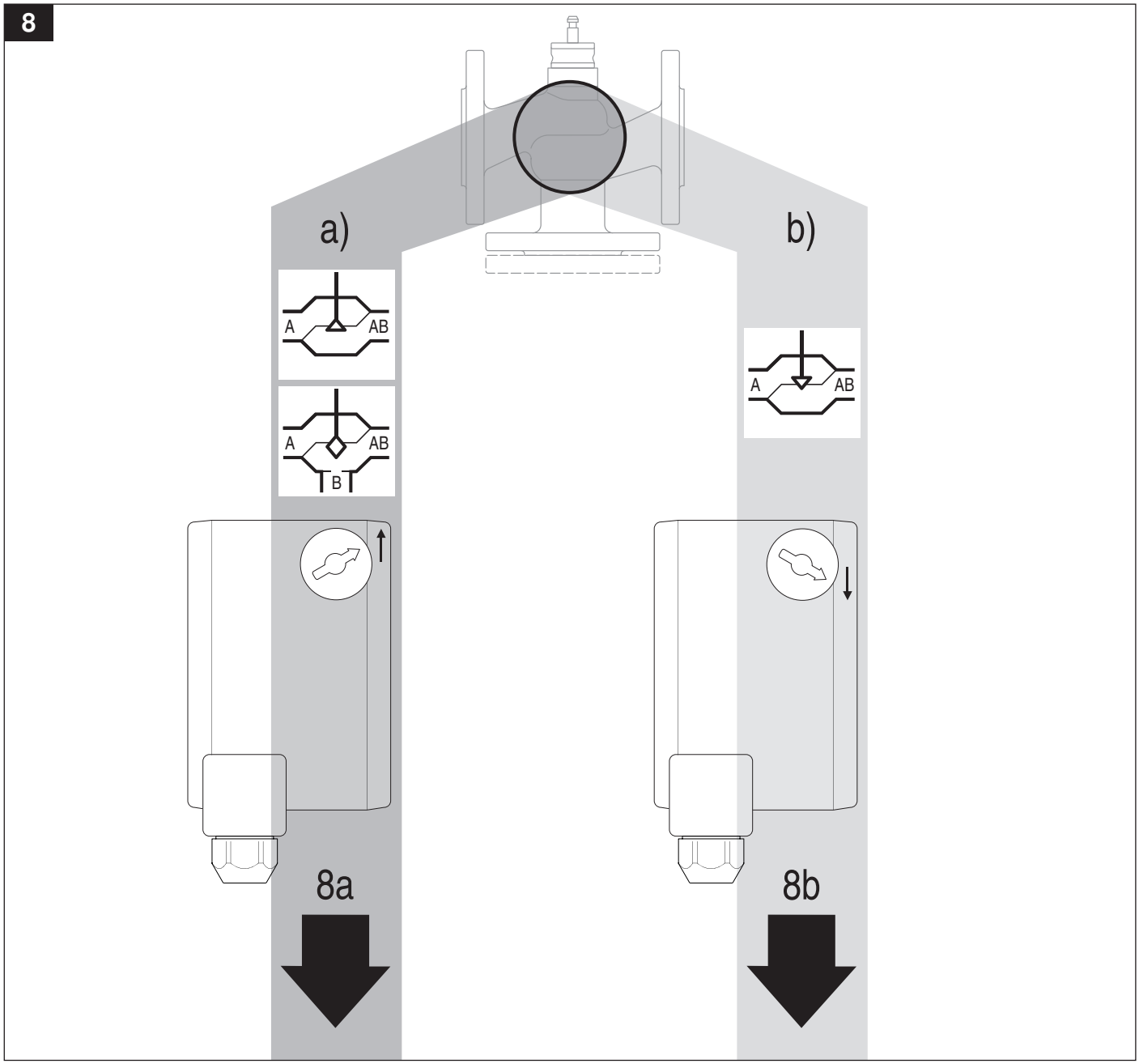

8a

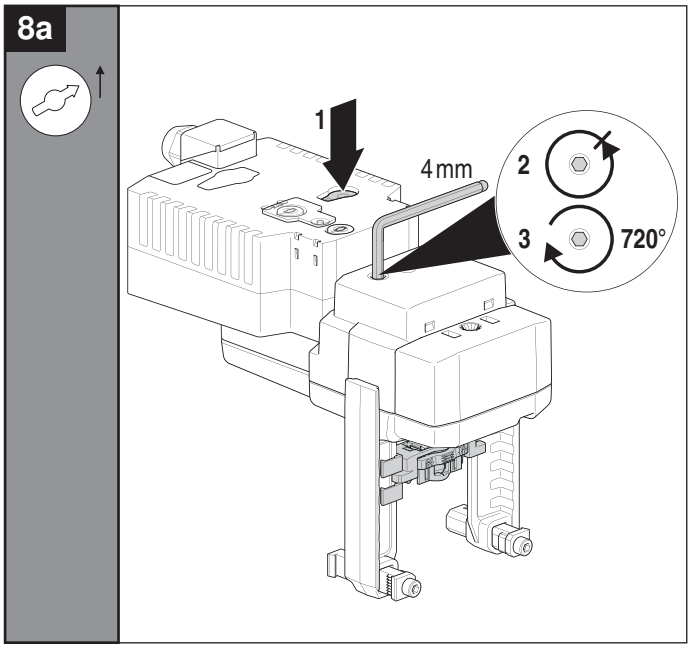

8b

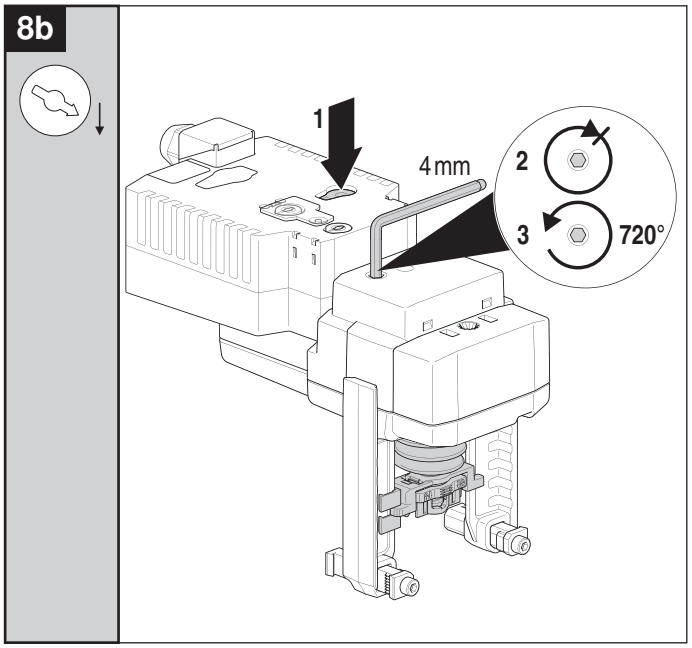

9a

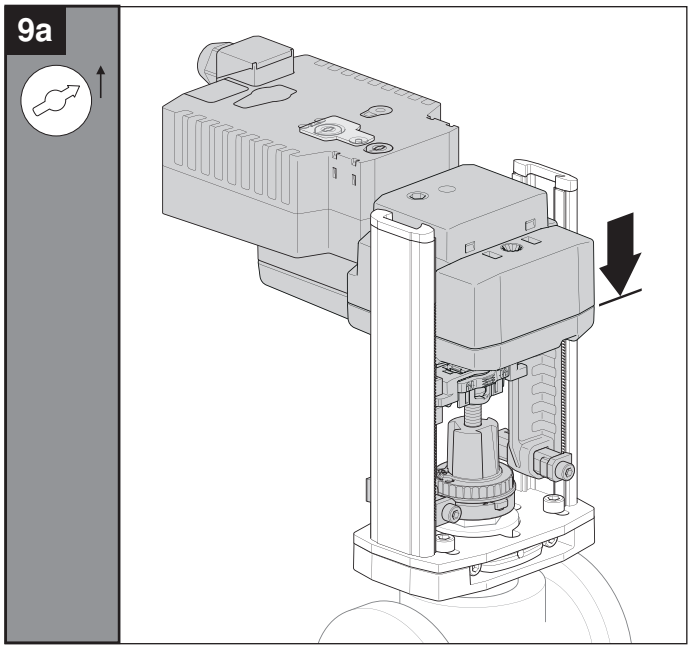

9b

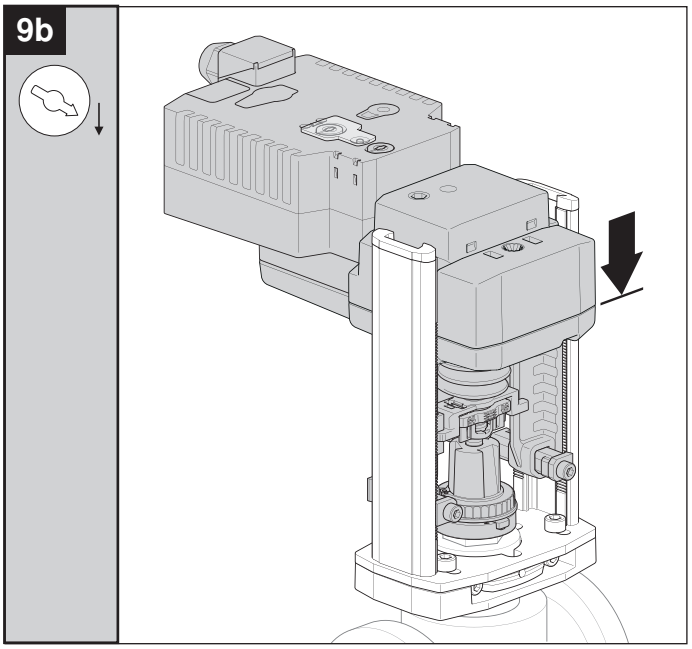

10a

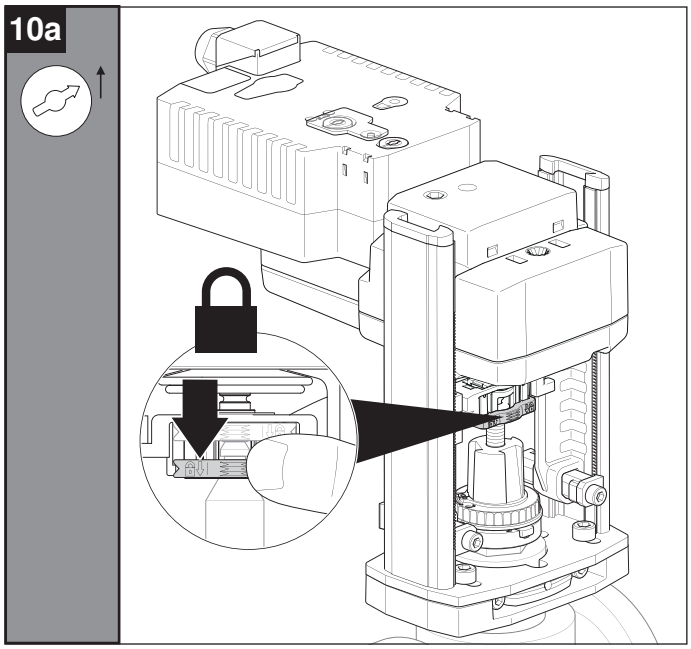

10b

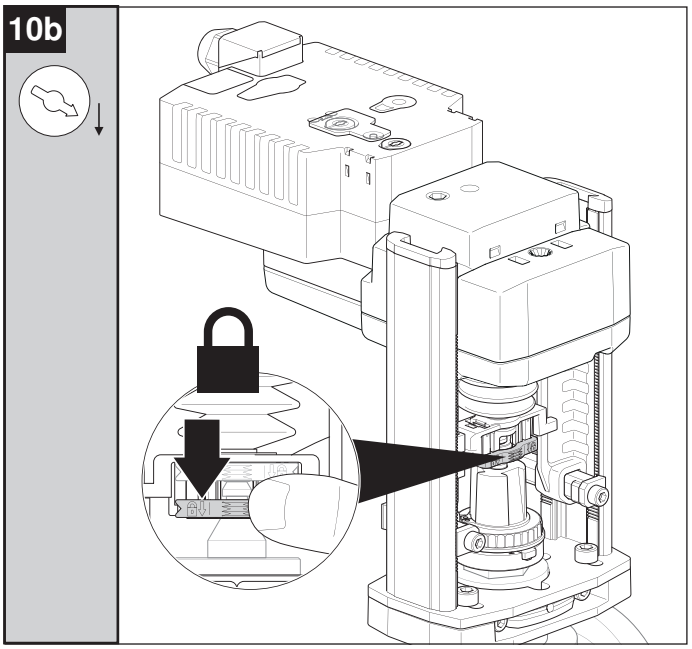

11a

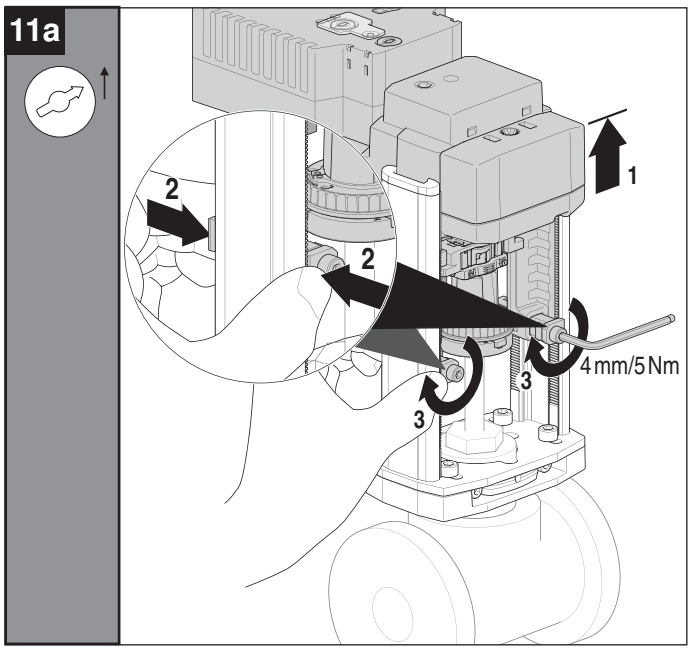
1
2
2
3
3
4 mm/5 Nm

11b

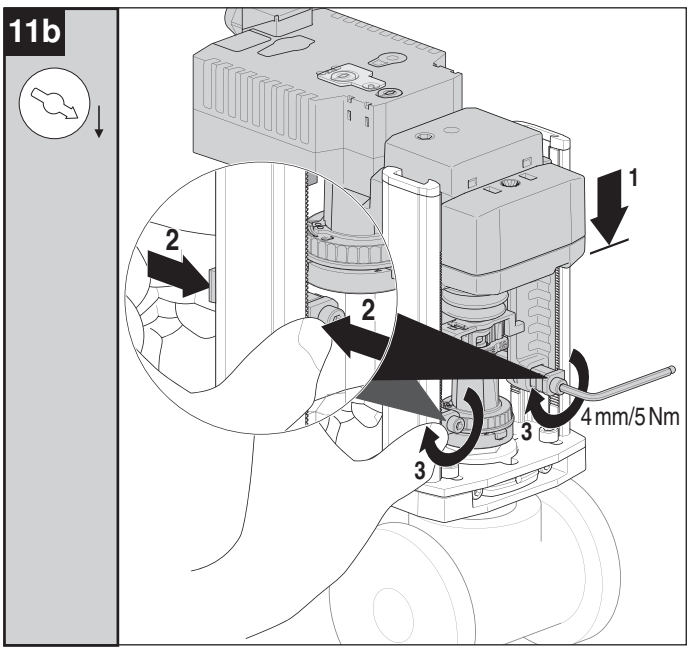
1
2
2
3
3
4 mm/5 Nm

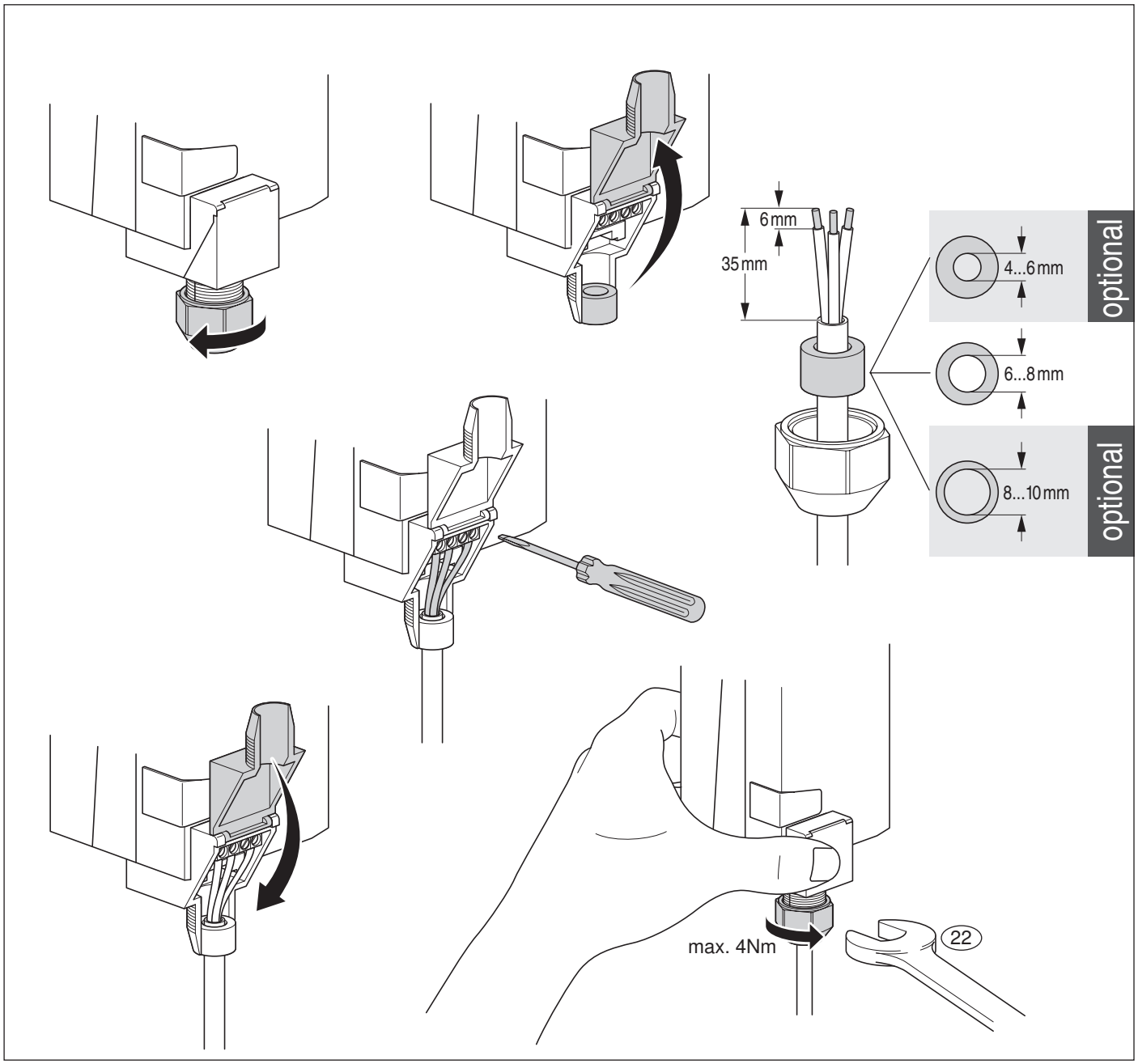
6 mm
35 mm
4...6 mm
optional
6...8 mm
8...10 mm
optional
max. 4Nm
22

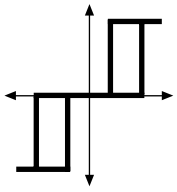

AC 24 V

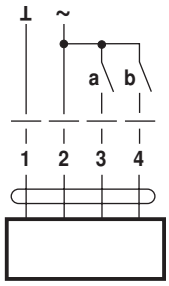

LVK24A-3-RE
NVK(C)24A-3-RE
SVK24A-3-RE

AC 230 V ⚠

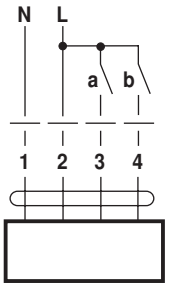

LVK230-3-RE
NVK(C)230-3-RE
SVK230-3-RE

3 a	4 b		
⊥	–	↓	↑
–	–	—	—
–	⊥	↑	↓
⊥	⊥	↓	↑

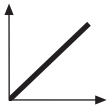

AC 24 V / DC 24 V

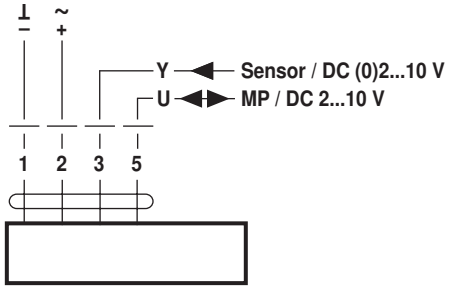

LVK24A-MP-RE
NVK(C)24A-MP-RE
SVK24A-MP-RE