Rotary actuator fail-safe for adjusting dampers in technical building installations

- Air damper size up to approx. 4 m²
- Torque motor 20 Nm
- Nominal voltage AC 24...240 V / DC 24...125 V
- Control Open/close
- With 2 integrated auxiliary switches
- Optimum weather protection for use outdoors

Picture may differ from product

## Technical data

| | | |
|---|---|---|
| **Electrical data** | Nominal voltage | AC 24...240 V / DC 24...125 V |
| | Nominal voltage frequency | 50/60 Hz |
| | Nominal voltage range | AC 19.2...264 V / DC 21.6...137.5 V |
| | Power consumption in operation | 7 W |
| | Power consumption in rest position | 3.5 W |
| | Power consumption for wire sizing | 18 VA |
| | Auxiliary switch | 2x SPDT, 1x 10% / 1x 11...100% |
| | Switching capacity auxiliary switch | 1 mA...3 A (0.5 A inductive), DC 5 V...AC 250 V |
| | Connection supply / control | Cable 1 m, 2x 0.75 mm², FRNC (halogen-free) |
| | Connection auxiliary switch | Cable 1 m, 6x 0.75 mm², FRNC (halogen-free) |
| | Parallel operation | Yes (note the performance data) |
| **Functional data** | Torque motor | 20 Nm |
| | Torque fail-safe | 20 Nm |
| | Direction of motion fail-safe | L (ccw) |
| | Manual override | by means of hand crank and locking switch |
| | Angle of rotation | Max. 95° |
| | Angle of rotation note | adjustable starting at 33% in 2.5% steps (with mechanical end stop) |
| | Running time motor | 75 s / 90° |
| | Running time fail-safe | <20 s @ -20...50°C, <60 s @ -30°C |
| | Sound power level, motor | 45 dB(A) |
| | Mechanical interface | Universal shaft clamp 12...26.7 mm |
| | Position indication | Mechanical, pluggable |
| | Service life | Min. 60'000 fail-safe positions |
| **Safety data** | Protection class IEC/EN | II, reinforced insulation |
| | Protection class UL | II, reinforced insulation |
| | Protection class auxiliary switch IEC/EN | II, reinforced insulation |
| | Degree of protection IEC/EN | IP66/67 |
| | Degree of protection NEMA/UL | NEMA 4X |
| | Housing | UL Enclosure Type 4X |
| | EMC | CE according to 2014/30/EU |
| | Low voltage directive | CE according to 2014/35/EU |
| | Certification IEC/EN | IEC/EN 60730-1 and IEC/EN 60730-2-14 |
| | UL Approval | cULus according to UL60730-1A, UL60730-2-14 and CAN/CSA E60730-1<br>The UL marking on the actuator depends on the production site, the device is UL-compliant in any case |
| | Type of action | Type 1.AA.B |

## Technical data

| | | |
|---|---|---|
| **Safety data** | Rated impulse voltage supply / control | 4 kV |
| | Rated impulse voltage auxiliary switch | 2.5 kV |
| | Pollution degree | 4 |
| | Ambient humidity | Max. 100% RH |
| | Ambient temperature | -30...50°C [-22...122°F] |
| | Storage temperature | -40...80°C [-40...176°F] |
| | Servicing | maintenance-free |
| **Weight** | Weight | 4.5 kg |

## Safety notes

- This device has been designed for use in stationary heating, ventilation and air-conditioning systems and must not be used outside the specified field of application, especially in aircraft or in any other airborne means of transport.
- Caution: Mains voltage!
- Only authorised specialists may carry out installation. All applicable legal or institutional installation regulations must be complied with during installation.
- Junction boxes must at least correspond with housing IP degree of protection!
- The cover of the protective housing may be opened for adjustment and servicing. When it is closed afterwards, the housing must seal tight (see installation instructions).
- The device may only be opened at the manufacturer's site. It does not contain any parts that can be replaced or repaired by the user.
- The cables must not be removed from the device installed in the interior.
- To calculate the torque required, the specifications supplied by the damper manufacturers concerning the cross-section and the design, as well as the installation situation and the ventilation conditions must be observed.
- The two switches integrated in the actuator are to be operated either on mains voltage or on safety extra-low voltage. The combination mains voltage/safety extra-low voltage is not permitted.
- The device contains electrical and electronic components and must not be disposed of as household refuse. All locally valid regulations and requirements must be observed.
- The device is not designed for applications where chemical influences (gases, fluids) are present or for utilisation in corrosive environments in general.
- The actuator may not be used in plenary applications (e.g. suspended ceilings or raised floors).
- The materials used may be subject to external influences (temperature, pressure, construction fastening, effect of chemical substances, etc.), which cannot be simulated in laboratory tests or field trials. In case of doubt, we definitely recommend that you carry out a test. This information does not imply any legal entitlement. Belimo will not be held liable and will provide no warranty.
- Flexible metallic cable conduits or threaded cable conduits of equal value are to be used for UL (NEMA) Type 4X applications.
- When used under high UV loads, e.g. extreme sunlight, the use of flexible metallic or equivalent cable conduits is recommended.

## Product features

**Fields of application**

The actuator is particularly suitable for utilisation in outdoor applications and is protected against the following weather conditions:
- UV radiation
- Rain / Snow
- Dirt / Dust
- Air humidity

## Product features

**Operating mode**

The actuator is equipped with a universal power supply module that can utilise supply voltages of AC 24...240 V and DC 24...125V.

The actuator moves the damper to the operating position at the same time as tensioning the return spring. The damper is turned back to the fail-safe position by spring force when the supply voltage is interrupted.

**Simple direct mounting**

Simple direct mounting on the damper shaft with a universal shaft clamp, supplied with an anti-rotation mechanism to prevent the actuator from rotating.

**Manual override**

By using the hand crank the damper can be actuated manually and engaged with the locking switch at any position. Unlocking is carried out manually or automatically by applying the operating voltage.

The housing cover must be removed for manual override.

**Adjustable angle of rotation**

Adjustable angle of rotation with mechanical end stops.

**High functional reliability**

The actuator is overload protected, requires no limit switches and automatically stops when the end stop is reached.

**Flexible signalling**

The actuator has one auxiliary switch with a fixed setting and one adjustable auxiliary switch. They permit a 10% or 11...100% angle of rotation to be signaled.

## Accessories

**Mechanical accessories**

| Description | Type |
|---|---|
| Cable gland for cable diameter ø4...10 mm | Z-KB-PG11 |

## Electrical installation

**Caution: Mains voltage!**

**Parallel connection of other actuators possible. Observe the performance data.**

**Wire colours:**
1 = blue
2 = brown
S1 = violet
S2 = red
S3 = white
S4 = orange
S5 = pink
S6 = grey

AC 24...240 V / DC 24...125 V, open/close

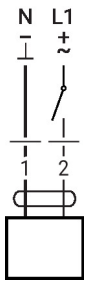


Auxiliary switch

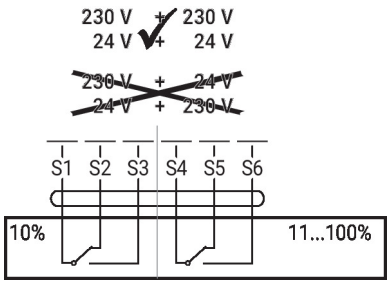

## Operating controls and indicators

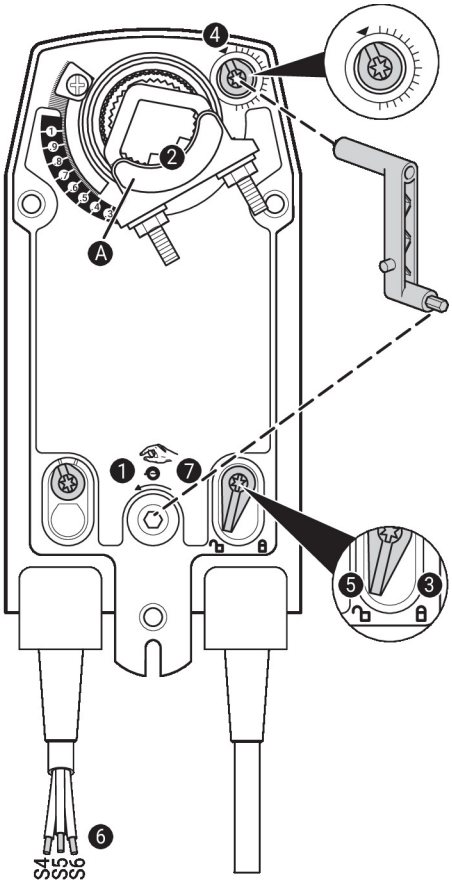


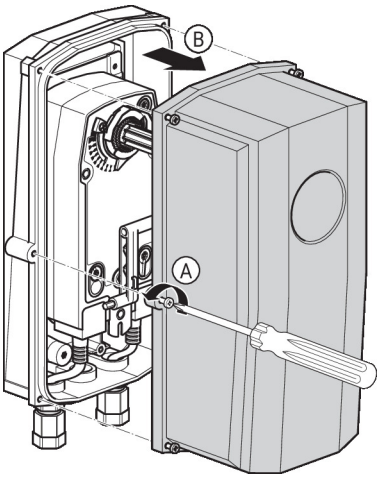

### Auxiliary switch settings

> ⚠ **Note:** Perform settings on the actuator only in deenergised state.

**For the auxiliary switch position settings, carry out points ❶ to ❼ successively.**

❶ **Manual override**
Turn the hand crank until the desired switching position is set.

❷ **Shaft clamp**
Edge line Ⓐ displays the desired switching position of the actuator on the scale.

❸ **Fasten the locking device**
Turn the locking switch to the „Locked padlock“ symbol.

❹ **Auxiliary switch**
Turn rotary knob until the notch points to the arrow symbol.

❺ **Unlock the locking device**
Turn the locking switch to the „Unlocked padlock“ symbol or unlock with the hand crank.

❻ **Cable**
Connect continuity tester to S4 + S5 or to S4 + S6.

❼ **Manual override**
Turn the hand crank until the desired switching position is set and check whether the continuity tester shows the switching point.

## Dimensions

### Shaft length

| | |
|---|---|
| 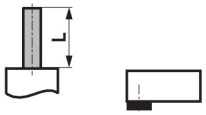 | - |
| | 16...105 (ø12...19)<br>16...45 (ø19...26.7) |

### Clamping range

| | | |
|---|---|---|
| 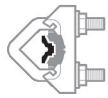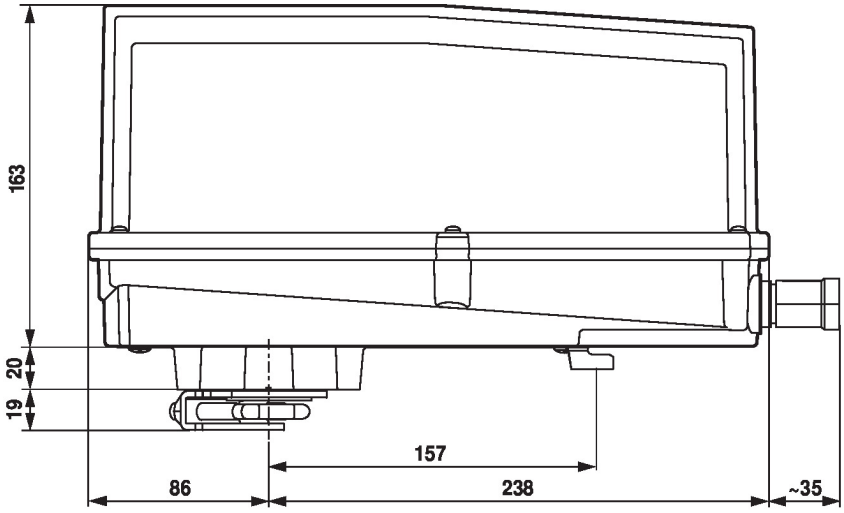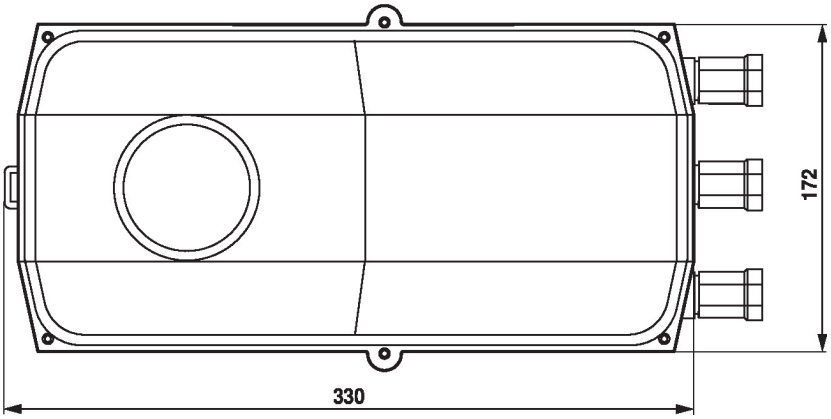 | | |
| | 12...22 | 12...18 |
| | | |
| | 22...26.7 | 12...18 |