RobustLine rotary actuator for rotary valves and butterfly valves

- Torque motor 20 Nm
- Nominal voltage AC/DC 24 V
- Control Open/close, 3-point
- Optimum protection against corrosion and chemical influences, UV radiation, damp and condensation

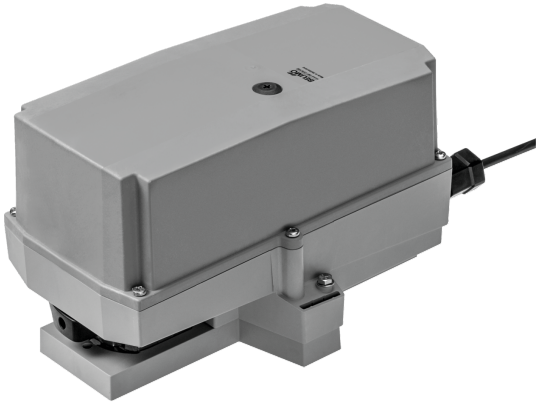

Picture may differ from product

Technical data

Electrical data	Nominal voltage	AC/DC 24 V
	Nominal voltage frequency	50/60 Hz
	Nominal voltage range	AC 19.2...28.8 V / DC 19.2...28.8 V
	Power consumption in operation	2.5 W
	Power consumption in rest position	0.2 W
	Power consumption for wire sizing	5.5 VA
	Connection supply / control	Cable 1 m, 3x 0.75 mm^2 (halogen-free)
	Parallel operation	Yes (note the performance data)
Functional data	Torque motor	20 Nm
	Manual override	with push-button, can be locked
	Running time motor	90 s / 90°
	Sound power level, motor	45 dB(A)
	Position indication	Mechanical, pluggable
Safety data	Protection class IEC/EN	III, Safety Extra-Low Voltage (SELV)
	Power source UL	Class 2 Supply
	Degree of protection IEC/EN	IP66/67
	Degree of protection NEMA/UL	NEMA 4X
	Housing	UL Enclosure Type 4X
	EMC	CE according to 2014/30/EU
	Certification IEC/EN	IEC/EN 60730-1 and IEC/EN 60730-2-14
	UL Approval	cULus according to UL60730-1A, UL60730-2-14 and CAN/CSA E60730-1 The UL marking on the actuator depends on the production site, the device is UL-compliant in any case
	Type of action	Type 1
	Rated impulse voltage supply / control	0.8 kV
	Pollution degree	4
	Ambient humidity	Max. 100% RH
	Ambient temperature	-30...50°C [-22...122°F]
	Storage temperature	-40...80°C [-40...176°F]
	Servicing	maintenance-free
Mechanical data	Connection flange	F05
Weight	Weight	1.8 kg

Safety notes

- This device has been designed for use in stationary heating, ventilation and air-conditioning systems and must not be used outside the specified field of application, especially in aircraft or in any other airborne means of transport.
- Only authorised specialists may carry out installation. All applicable legal or institutional installation regulations must be complied with during installation.
- Junction boxes must at least correspond with housing IP degree of protection!
- The switch for changing the direction of rotation may only be operated by authorised specialists. The direction of rotation must not in particular be reversed in a frost protection circuit.
- The cover of the protective housing may be opened for adjustment and servicing. When it is closed afterwards, the housing must seal tight (see installation instructions).
- The device may only be opened at the manufacturer's site. It does not contain any parts that can be replaced or repaired by the user.
- The cables must not be removed from the device installed in the interior.
- The device contains electrical and electronic components and must not be disposed of as household refuse. All locally valid regulations and requirements must be observed.
- The information on chemical resistance refers to laboratory tests with raw materials and finished products and to trials in the field in the areas of application indicated.
- The materials used may be subjected to external influences (temperature, pressure, constructional fixture, effect of chemical substances, etc.), which cannot be simulated in laboratory tests or field trials.
- The information regarding areas of application and resistance can therefore only serve as a guideline. In case of doubt, we definitely recommend that you carry out a test. This information does not imply any legal entitlement. Belimo will not be held liable and will provide no warranty. The chemical or mechanical resistance of the materials used is not alone sufficient for judging the suitability of a product. Regulations pertaining to combustible liquids such as solvents etc. must be taken into account with special reference to explosion protection.
- When used under high UV loads, e.g. extreme sunlight, the use of flexible metallic or equivalent cable conduits is recommended.

Product features

Fields of application

The actuator is particularly suited for use in difficult conditions, e.g. in the field of:
- Wood drying
- Animal breeding
- Food processing
- Agriculture
- Indoor swimming pools / bathhouses
- Rooftop ventilation plant rooms
- General outdoor applications

Resistances

Noxious gas test EN 60068-2-60 (Fraunhofer Institut ICT / DE)
Salt fog spray test EN 60068-2-52 (Fraunhofer Institut ICT / DE)
Ammoniac test DIN 50916-2 (Fraunhofer Institut ICT / DE)
Climate test IEC60068-2-30 (Trikon Solutions AG / CH)
Disinfectant (animals) (Trikon Solutions AG / CH)
UV Test (Solar radiation at ground level) EN 60068-2-5, EN 60068-2-63 (Quinel / Zug CH)

Used materials

Actuator housing polypropylene (PP)
Cable glands / hollow shaft polyamide (PA)
Connecting cable FRNC
Clamp / screws in general Steel 1.4404
Seals EPDM
Form fit insert aluminium anodised

Product features

Tappet shaft
The form fit adapter ZPV-14 is included in the scope of delivery.

Simple direct mounting
Simple direct mounting on the rotary valve or butterfly valve with mounting flange. The mounting orientation in relation to the fitting can be selected in 90° steps.

Manual override
Manual override with push-button possible (the gear train is disengaged for as long as the button is pressed or remains locked).
The housing cover must be removed for manual override.

Adjustable angle of rotation
Adjustable angle of rotation with mechanical end stops. Standard setting 0...90°. The housing cover must be removed to set the angle of rotation.

High functional reliability
The actuator is overload protected, requires no limit switches and automatically stops when the end stop is reached.

Accessories

Electrical accessories

Description	Type
Auxiliary switch 2x SPDT add-on, grey	S2A GR
Feedback potentiometer 140 Ω add-on	P140A
Feedback potentiometer 1 kΩ add-on	P1000A
Feedback potentiometer 10 kΩ add-on	P10000A

Electrical installation

Supply from isolating transformer.
Parallel connection of other actuators possible. Observe the performance data.
Direction of rotation switch is covered. Factory setting: Direction of rotation Y2.

Wire colours:
1 = black
2 = red
3 = white

AC/DC 24 V, open/close

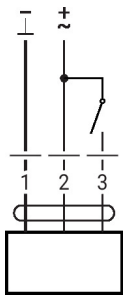

AC/DC 24 V, 3-point

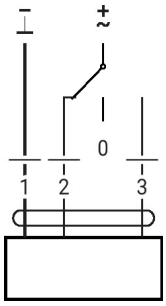

1	2	3	
			A - AB = 0%
			A - AB = 100%
			stop
			A - AB = 100%

Dimensions

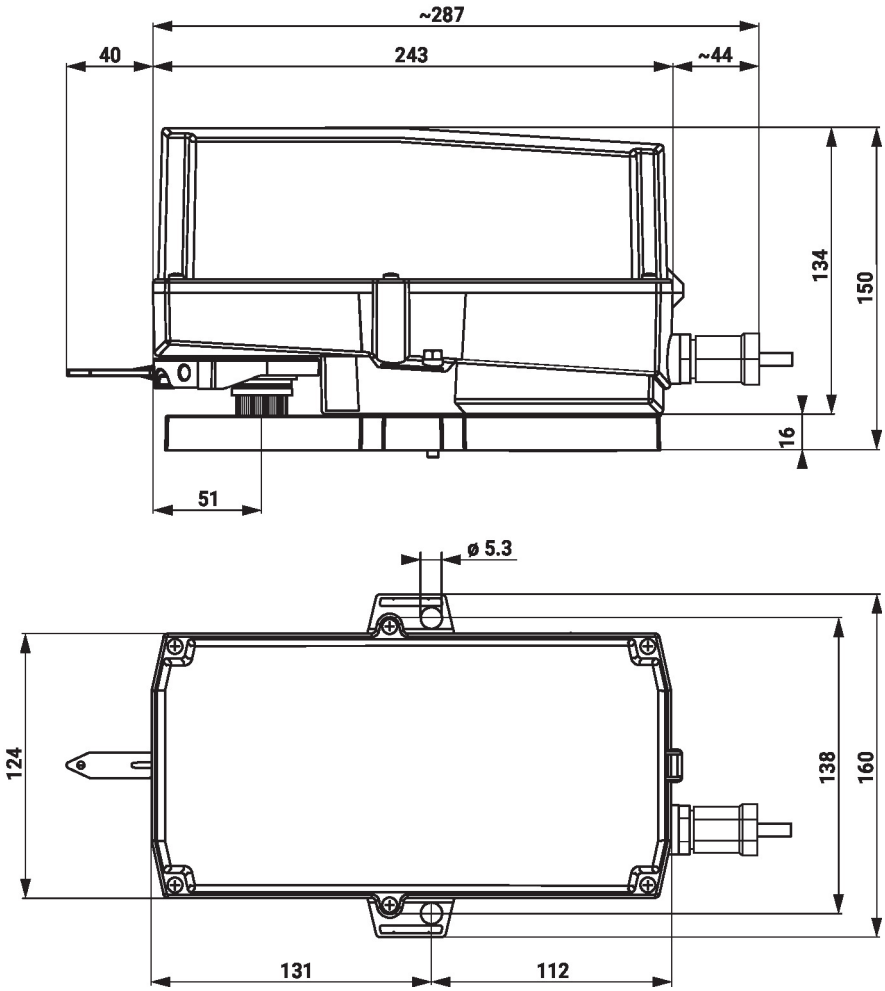

Further documentation

- The complete product range for water applications
- Data sheets for rotary valves and butterfly valves
- Installation instructions for actuators and/or rotary valves and butterfly valves
- General notes for project planning