71230-00001.D

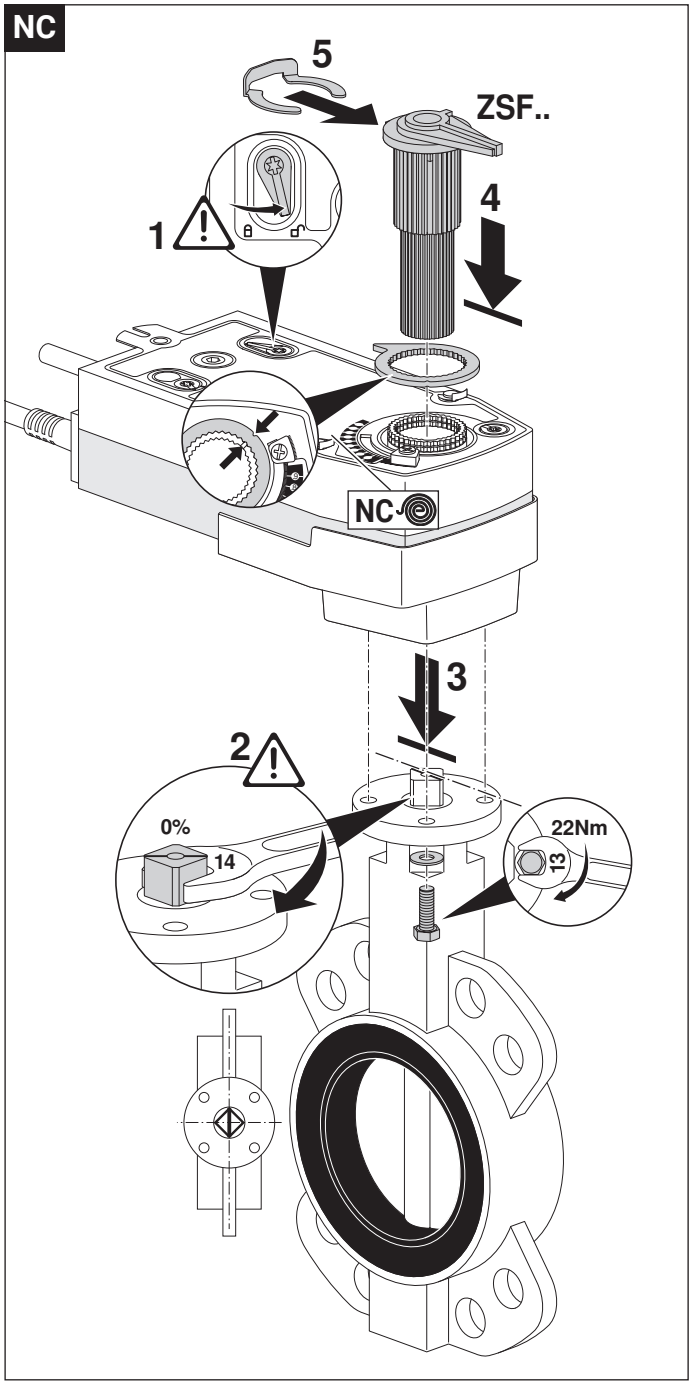

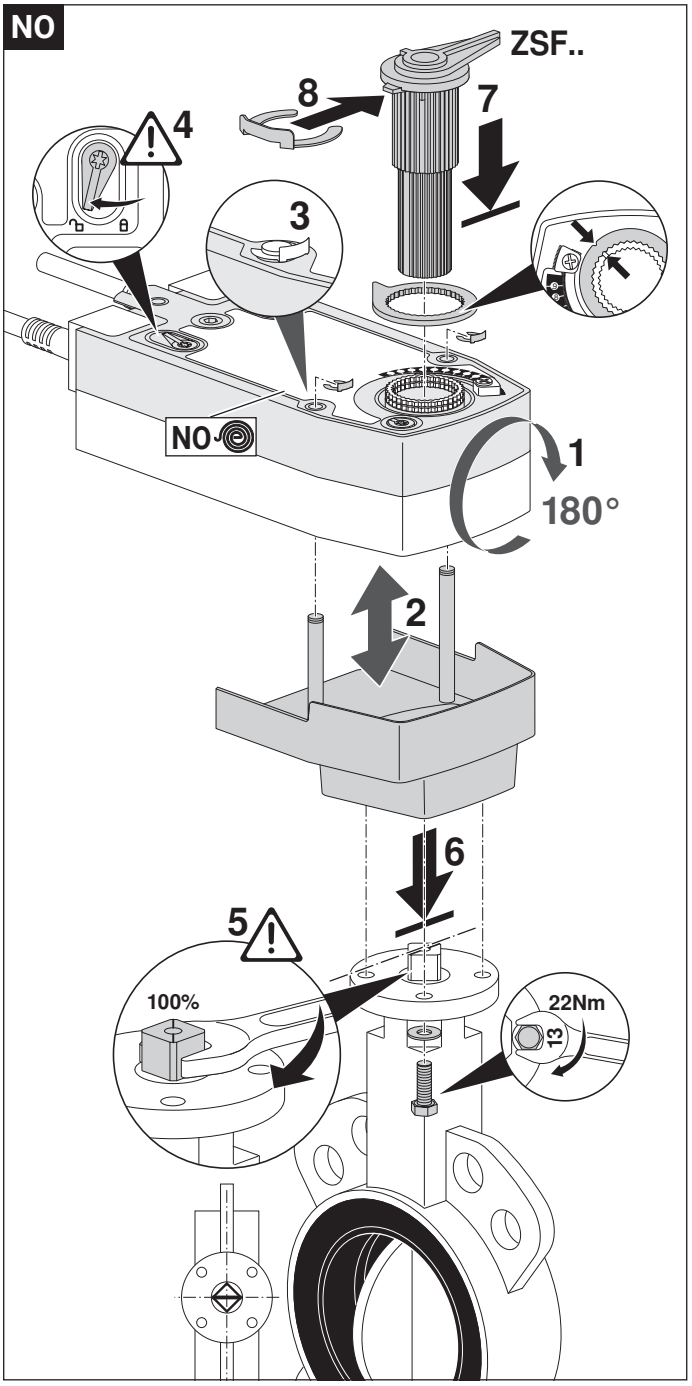

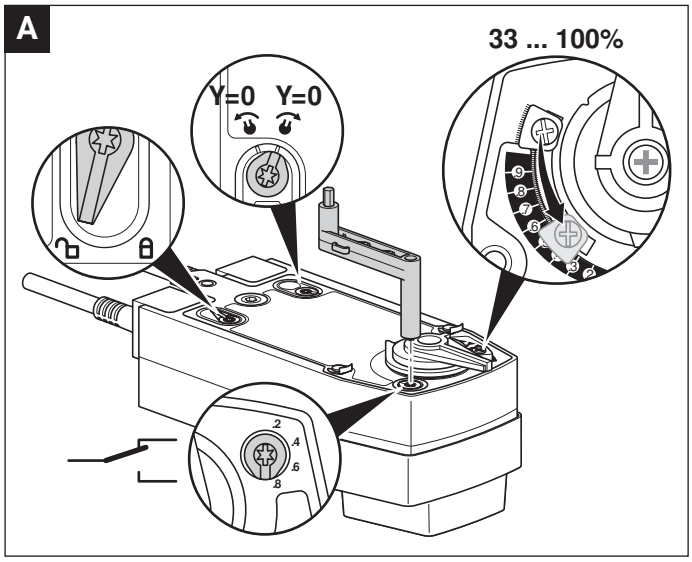

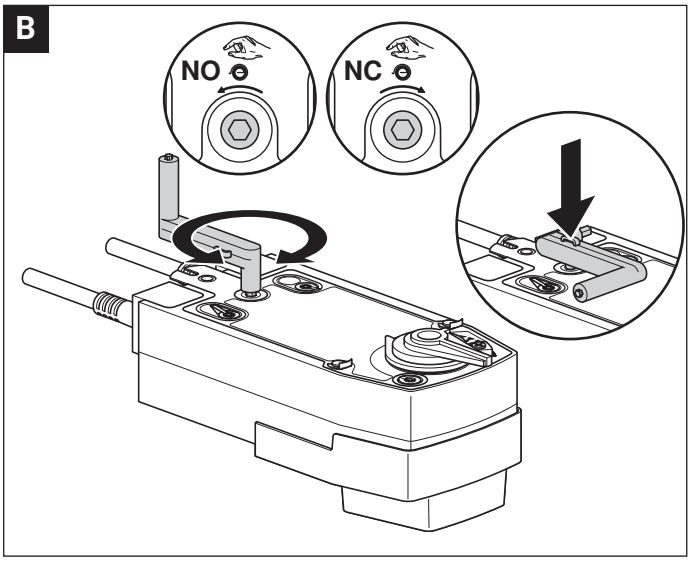

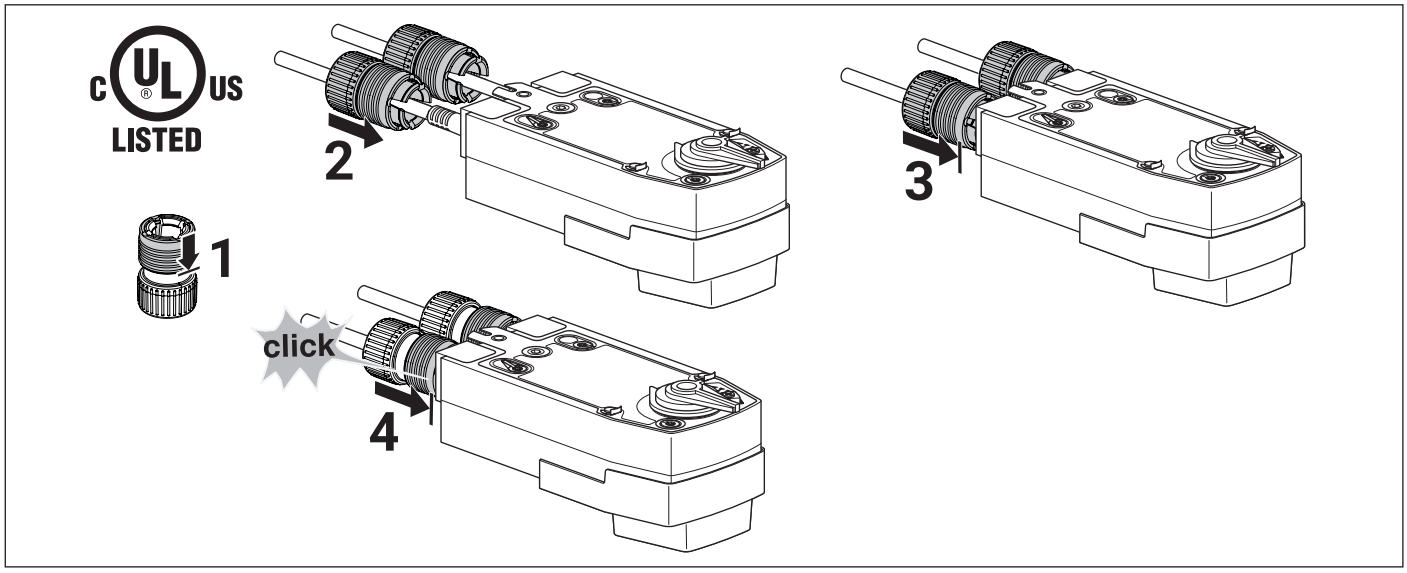
c UL us
LISTED
1
2
3
click
4

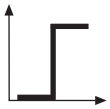

AC 24 V / DC 24 V

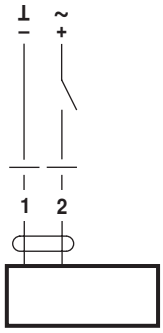

NRF24A(-O)-R
SRF24A(-O)-R

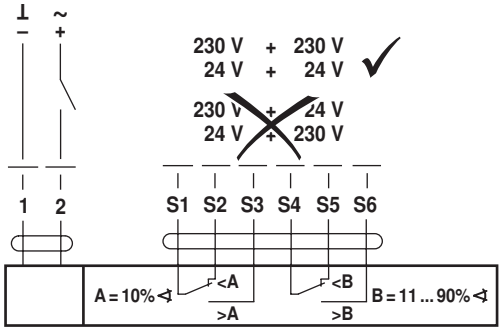

NRF24A-S2(-O)-R
SRF24A-S2(-O)-R

AC 230 V ⚠

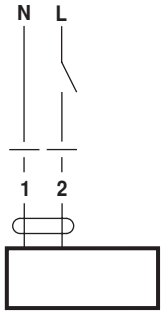

NRF230A(-O)-R
SRF230A(-O)-R

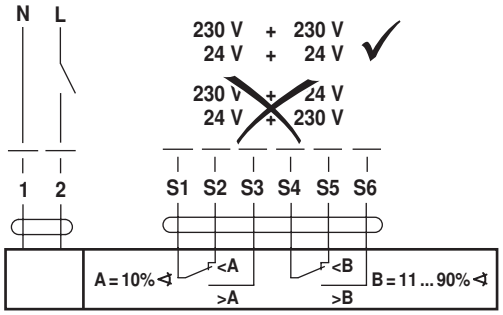

NRF230A-S2(-O)-R
SRF230A-S2(-O)-R

AC 24 ... 240 V / DC 24 ... 125 V ⚠

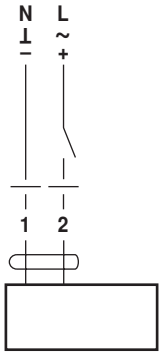

NRFA(-O)-R
SRFA(-O)-R

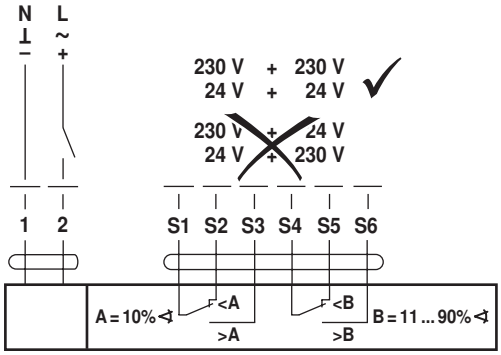

NRFA-S2(-O)-R
SRFA-S2(-O)-R

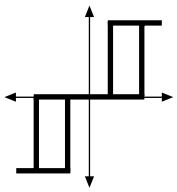

AC 230 V ⚠

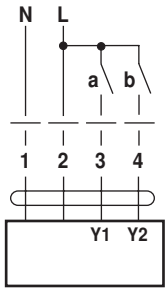

NRF(D)230A-3(-O)-R
SRF230A-3(-O)-R

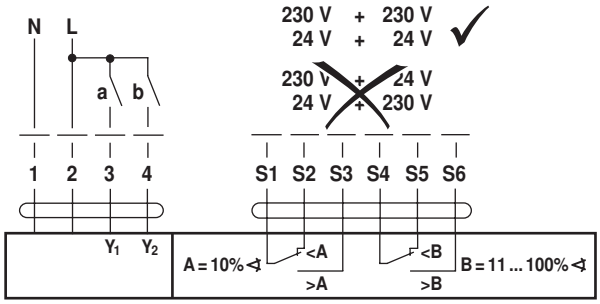

NRF(D)230A-3-S2(-O)-R
SRF230A-3-S2(-O)-R

a (Y1)	b (Y2)	NO	NC	
				A – AB = 100%
		stop	stop	
				A – AB = 0%

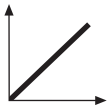

AC 24 V / DC 24 V

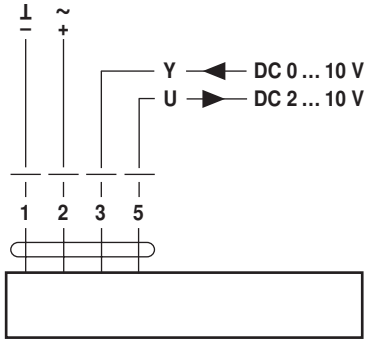

NRF24A-SR(-O)-R
SRF24A-SR(-O)-R

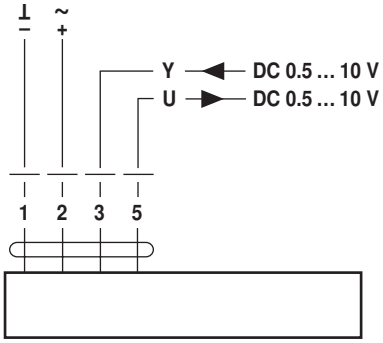

NRF24A-SZ(-O)-R
SRF24A-SZ(-O)-R

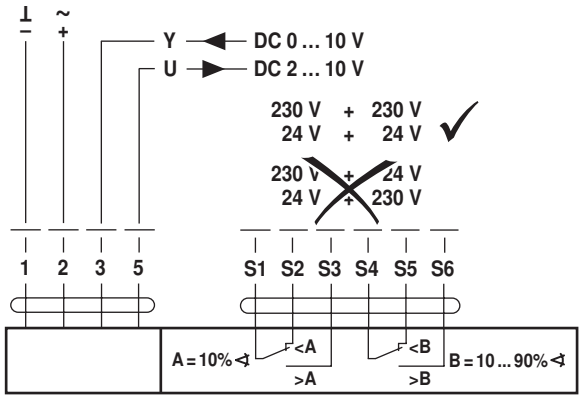

NRF24A-SR-S2(-O)-R
SRF24A-SR-S2(-O)-R

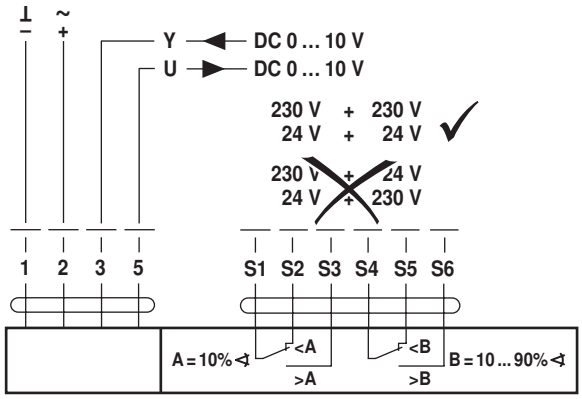

NRF24A-SZ-S2(-O)-R
SRF24A-SZ-S2(-O)-R

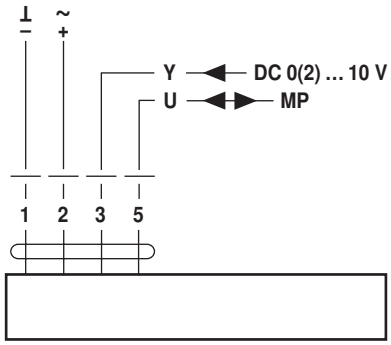
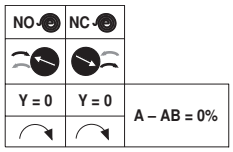
NRF24A-MP(-O)-R
SRF24A-MP(-O)-R