Damper actuator for adjusting dampers in technical building installations

- Air damper size up to approx. 0.4 m²
- Torque motor 2 Nm
- Nominal voltage AC/DC 24 V
- Control Open/close, 3-point
- Running time motor 35 s

Picture may differ from product

Technical data

Electrical data	Nominal voltage	AC/DC 24 V
	Nominal voltage frequency	50/60 Hz
	Nominal voltage range	AC 19.2...28.8 V / DC 19.2...28.8 V
	Power consumption in operation	1.5 W
	Power consumption in rest position	0.2 W
	Power consumption for wire sizing	2.5 VA
	Connection supply / control	Cable 1 m, 3x 0.75 mm²
	Parallel operation	Yes (note the performance data)
Functional data	Torque motor	2 Nm
	Direction of motion motor	selectable with switch 0 (ccw rotation) / 1 (cw rotation)
	Manual override	with push-button, can be locked
	Angle of rotation	Max. 95°
	Angle of rotation note	can be limited on both sides with adjustable mechanical end stops
	Running time motor	35 s / 90°
	Sound power level, motor	40 dB(A)
	Mechanical interface	Universal shaft clamp 6...20 mm
	Position indication	Mechanical, pluggable
Safety data	Protection class IEC/EN	III, Safety Extra-Low Voltage (SELV)
	Power source UL	Class 2 Supply
	Degree of protection IEC/EN	IP54
	Degree of protection NEMA/UL	NEMA 2
	Housing	UL Enclosure Type 2
	EMC	CE according to 2014/30/EU
	Certification IEC/EN	IEC/EN 60730-1 and IEC/EN 60730-2-14
	UL Approval	cULus according to UL60730-1A, UL60730-2-14 and CAN/CSA E60730-1 The UL marking on the actuator depends on the production site, the device is UL-compliant in any case
	Hygiene test	According to VDI 6022 Part 1 / SWKI VA 104-01, cleanable and disinfectable, low emission
	Type of action	Type 1
	Rated impulse voltage supply / control	0.8 kV

Technical data

Safety data	Pollution degree	3
	Ambient humidity	Max. 95% RH, non-condensing
	Ambient temperature	-30...50°C [-22...122°F]
	Storage temperature	-40...80°C [-40...176°F]
	Servicing	maintenance-free
Weight	Weight	0.40 kg

Safety notes

- This device has been designed for use in stationary heating, ventilation and air-conditioning systems and must not be used outside the specified field of application, especially in aircraft or in any other airborne means of transport.
- Outdoor application: only possible in case that no (sea) water, snow, ice, insolation or aggressive gases interfere directly with the device and that it is ensured that the ambient conditions remain within the thresholds according to the data sheet at any time.
- Only authorised specialists may carry out installation. All applicable legal or institutional installation regulations must be complied with during installation.
- The device may only be opened at the manufacturer's site. It does not contain any parts that can be replaced or repaired by the user.
- Cables must not be removed from the device.
- To calculate the torque required, the specifications supplied by the damper manufacturers concerning the cross-section and the design, as well as the installation situation and the ventilation conditions must be observed.
- The device contains electrical and electronic components and must not be disposed of as household refuse. All locally valid regulations and requirements must be observed.

Product features

Simple direct mounting
Simple direct mounting on the damper shaft with a universal shaft clamp, supplied with an anti-rotation mechanism to prevent the actuator from rotating.

Manual override
Manual override with push-button possible (the gear train is disengaged for as long as the button is pressed or remains locked).

Adjustable angle of rotation
Adjustable angle of rotation with mechanical end stops.

High functional reliability
The actuator is overload protected, requires no limit switches and automatically stops when the end stop is reached.

Accessories

Electrical accessories

Description	Type
Auxiliary switch 1x SPDT add-on	S1A
Auxiliary switch 2x SPDT add-on	S2A
Feedback potentiometer 140 Ω add-on	P140A
Feedback potentiometer 1 kΩ add-on	P1000A
Feedback potentiometer 10 kΩ add-on	P10000A

Mechanical accessories

Description	Type
Shaft extension 170 mm ø10 mm for damper shaft ø6...16 mm	AV6-20
Shaft clamp one-sided, clamping range ø6...20 mm, Multipack 20 pcs.	K-ELA
Shaft clamp one-sided, clamping range ø6...10 mm, Multipack 20 pcs.	K-ELA10
Shaft clamp one-sided, clamping range ø6...13 mm, Multipack 20 pcs.	K-ELA13
Shaft clamp one-sided, clamping range ø6...16 mm, Multipack 20 pcs.	K-ELA16
Anti-rotation mechanism 180 mm, Multipack 20 pcs.	Z-ARS180
Form fit insert 8x8 mm, Multipack 20 pcs.	ZF8-LMA
Form fit insert 10x10 mm, Multipack 20 pcs.	ZF10-LMA

Accessories

Description	Type
Form fit insert 12x12 mm, Multipack 20 pcs.	ZF12-LMA
Form fit insert 8x8 mm, with angle of rotation limiter and position indicator, Multipack 20 pcs.	ZFRL8-LMA
Form fit insert 10x10 mm, with angle of rotation limiter and position indicator, Multipack 20 pcs.	ZFRL10-LMA
Form fit insert 12x12 mm, with angle of rotation limiter and position indicator, Multipack 20 pcs.	ZFRL12-LMA

Electrical installation

Supply from isolating transformer.

Parallel connection of other actuators possible. Observe the performance data.

Wire colours:
1 = black
2 = red
3 = white

AC/DC 24 V, open/close

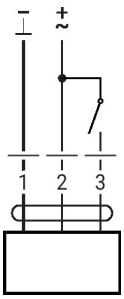

AC/DC 24 V, 3-point

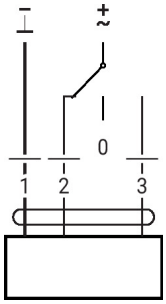

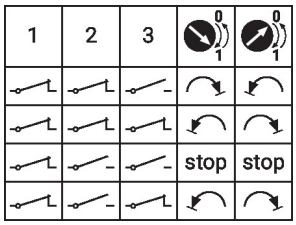

Dimensions

Spindle length

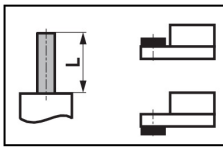	Min. 37
	-

Clamping range
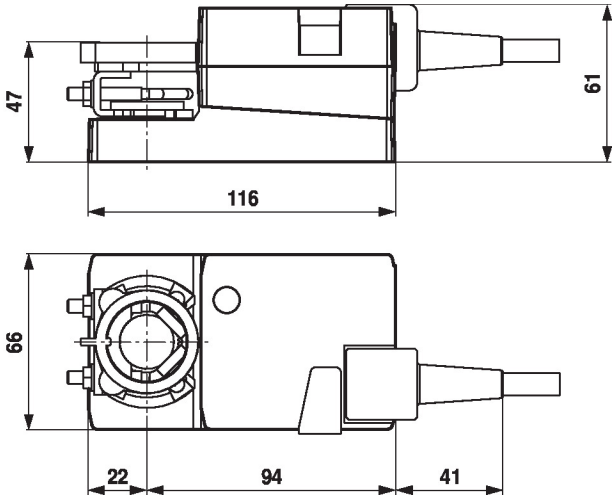
6...20	≥6	≤20