Air differential pressure sensor

Differential pressure transmitter with 8 selectable ranges and Modbus funtionality. For monitoring over-, under or the differential pressure of air and other non-flammable and non-aggressive gases. Typical application in HVAC systems for monitoring air filters, fans V-belts or fire and smoke control dampers. Options available with LCD display. IP65 / NEMA 4X rated housing.

Picture may differ from product

Type Overview

Type	Measuring range [Pa]	Communication	Output signal active pressure	Output signal active volumetric flow	Burst pressure	Display type
22ADP-156	0...7000	Modbus RTU	0...5 V, 0...10 V	0...5 V, 0...10 V	40 kPa	-
22ADP-156L	0...7000	Modbus RTU	0...5 V, 0...10 V	0...5 V, 0...10 V	40 kPa	LCD

Technical data

Electrical data	Nominal voltage	AC/DC 24 V
	Nominal voltage range	AC 19...29 V / DC 15...35 V
	Power consumption AC	4.3 VA
	Power consumption DC	2.3 W
	Electrical connection	Pluggable spring loaded terminal block max. 2.5 mm²
	Cable entry	Cable gland with strain relief 2x ø6 mm
Data bus communication	Communication	Modbus RTU
	Number of nodes	Modbus see interface description
Functional data	Medium	Air
	Multirange	8 measuring ranges selectable
	Voltage output	2 x 0...5 V, 0...10 V, min. resistance 10 kΩ
	Analogue output	Output 0...5/10 V selectable with switch
	Display	LCD, 29x35 mm with backlight Measured values volumetric flow: m³/h, cfm (configurable) Measured values pressure: Pa, inch WC (configurable)
	Typical response time	Adjustable 0.8 s or 4.0 s
Measuring data	Measured values	Differential pressure Volumetric flow
	Measuring fluid	Air and non-aggressive gases
Specification Pressure	Sensing element technology	Piezo measuring element
	Measuring range	0...7000 Pa

Technical data

Specification Pressure	Measuring range pressure settings	*del*Setting	Range [Pa]	Range [inch WC]	Factory setting	Synonyms
		S0	0...7000	0...28	✓	
		S1	0...5000	0...20		
		S2	0...4000	0...16		
		S3	0...3000	0...12		
		S4	0...2500	0...10		
		S5	0...2000	0...8		
		S6	0...1500	0...6		
		S7	0...1000	0...4		
	Accuracy	Deviation compared to the reference device measuring range ≤2000 Pa: ±10 Pa measuring range >2000 Pa: ±25 Pa				
	Long term stability	±2.5% FSO (Full Scale Output) / 4 yr.				
Specification Flow	Measuring range volumetric flow	Adjustable via Modbus Default setting: 0...750'000 m^3/h Selectable units: m^3/h, m^3/s, cfm				
Safety data	Protection class IEC/EN	III, Safety Extra-Low Voltage (SELV)				
	Power source UL	Class 2 Supply				
	Degree of protection IEC/EN	IP65				
	Degree of protection NEMA/UL	NEMA 4X				
	Housing	UL Enclosure Type 4X				
	EU Conformity	CE Marking				
	Certification IEC/EN	IEC/EN 60730-1 and IEC/EN 60730-2-6				
	Quality Standard	ISO 9001				
	UL Approval	cULus acc. to UL60730-1A/-2-6, CAN/CSA E60730-1				
	Type of action	Type 1				
	Rated impulse voltage supply	0.8 kV				
	Pollution degree	3				
	Ambient humidity	Max. 95% RH, non-condensing				
	Ambient temperature	-10...50°C [14...122°F]				
	Fluid temperature	-10...50°C [15...120°F]				
Materials	Housing	Cover: PC, orange Bottom: PC, orange Seal: NBR70, black UV resistant				
	Cable gland	PA6, black				

Safety notes

This device has been designed for use in stationary heating, ventilation and air-conditioning systems and must not be used outside the specified field of application. Unauthorised modifications are prohibited. The product must not be used in relation with any equipment that in case of a failure may threaten humans, animals or assets.

Ensure all power is disconnected before installing. Do not connect to live/operating equipment.

Only authorised specialists may carry out installation. All applicable legal or institutional installation regulations must be complied with during installation.

The device contains electrical and electronic components and must not be disposed of as household refuse. All locally valid regulations and requirements must be observed.

Remarks

Manual zero-point calibration

After initial commissioning

To carry out the zero-point calibration, the device must be connected to the power supply at least 15 minutes beforehand.

Calibration interval

≤250 Pa 3 months

≤500 Pa 6 months

>500 Pa 12 months

Procedure

• Release both tube connectors from the pressure ports + and -

(Carry out the manual zero-point calibration even if the display shows 0.)

• Press the button "Manual zero-point calibration" until the LED lights permanently

• Wait until the LED flashes again and reinstall the tube connectors to the pressure ports (pay attention to + and -)

Indicators

Indicators

Depending on the device and the number of measured values, the display automatically scales. Parameters, such as the fading in/out of measured values, brightness and traffic light function, are changed via the app or bus system. During the boot process, the software and hardware versions are displayed.

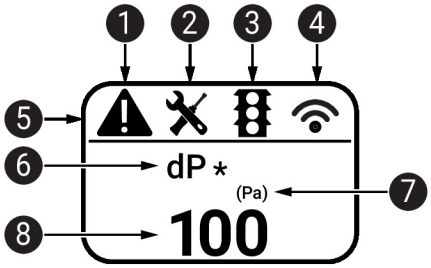

1. **Fault / sensor failure**
2. **Service / visual inspection due**
3. **TLF (traffic light function) active (thresholds for display colour changes)**
4. **Radio active (not available)**
5. **Status bar**
6. **Measured value (* appears when TLF function is activated for this value)**
7. **Unit of measure**
8. **Measured value**

Parts included

Description	Type
Mounting plate L housing	A-22D-A10
Duct connector kit, PVC tube 2 m, 2x duct connector (plastic) for 22ADP-..	A-22AP-A08
Cable Gland with strain relief ø6...8 mm	
Dowels	
Screws	

Accessories

Optional accessories

Description	Type
Duct connector, L 40 mm, metal, Tube connection 5 mm	A-22AP-A02
Duct connector, L 100 mm, metal, Tube connection 5 mm	A-22AP-A04
Connection adapter flex conduit, M20x1.5, for cable gland 1x 6 mm, Multipack 10 pcs.	A-22G-A01.1
Connection adapter flex conduit, M20, for cable gland 2x 6 mm, Multipack 10 pcs.	A-22G-A02.1

Tools

Description	Type
Belimo Duct Sensor Assistant App	Belimo Duct Sensor Assistant App

Accessories

	Description	Type
	Bluetooth dongle for Belimo Duct Sensor Assistant App	A-22G-A05
Mechanical accessories	**Description**	**Type**
	Duct connector kit, PVC tube 2 m, 2x duct connector (plastic) for 22ADP-..	A-22AP-A08

* Bluetooth dongle A-22G-A05

Certified and available in North America, European Union, EFTA States and UK.

Service

Wired connection

This sensor can be operated and configured using the Belimo Duct Sensor Assistant App.

When using the Belimo Duct Sensor Assistant App, the bluetooth dongle is required to enable communication between the app and the Belimo sensor.

For standard operation and configuration of the sensor, the bluetooth dongle and the Belimo Duct Sensor Assistant App are not needed. The sensor will arrive pre-configured with the factory default settings shown above.

Requirement:

- Bluetooth dongle (Belimo Part No: A-22G-A05)
- Bluetooth-capable smartphone
- Belimo Duct Sensor Assistant App (Google Play & Apple App Store)

Procedure:

- Plug the Bluetooth dongle into the sensor via the Micro-USB connector or by means of the interface PCB
- Connect Bluetooth-capable smartphone with Bluetooth dongle
- Select configuration in the Belimo Duct Sensor Assistant App

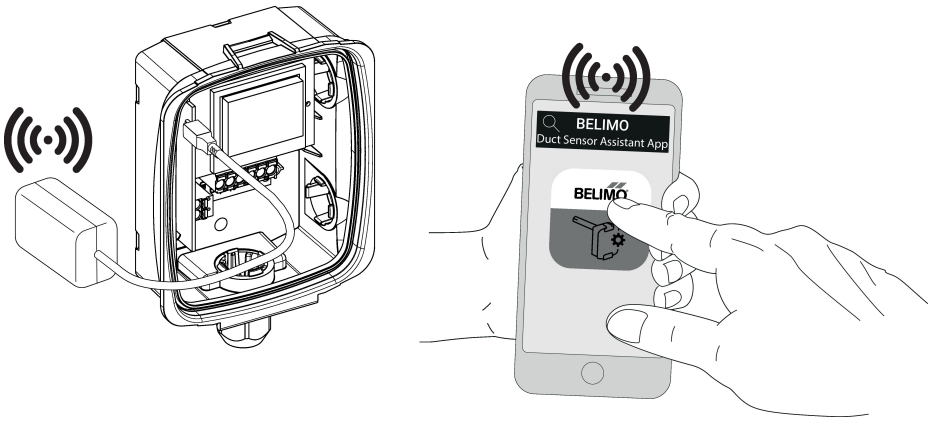

Wiring diagram

Supply from isolating transformer.

The wiring of Modbus RTU (RS-485) is to be carried out in accordance with applicable regulations (www.modbus.org). The device has switchable resistors for bus termination.

Modbus / BACnet: Supply and communication are not galvanically isolated. Connect earth signal of the devices with one another.

Wiring diagram

Manual zero-point calibration ①
Red: Error ②
Yellow: Tx ③
Yellow: Rx ④

Status LED ⑤ and ⑥
Slow flashing (0.5 Hz): Ok
Fast flashing (4 Hz): Error

Factory setting *
Pressure unit P
Response time T
Output signal U

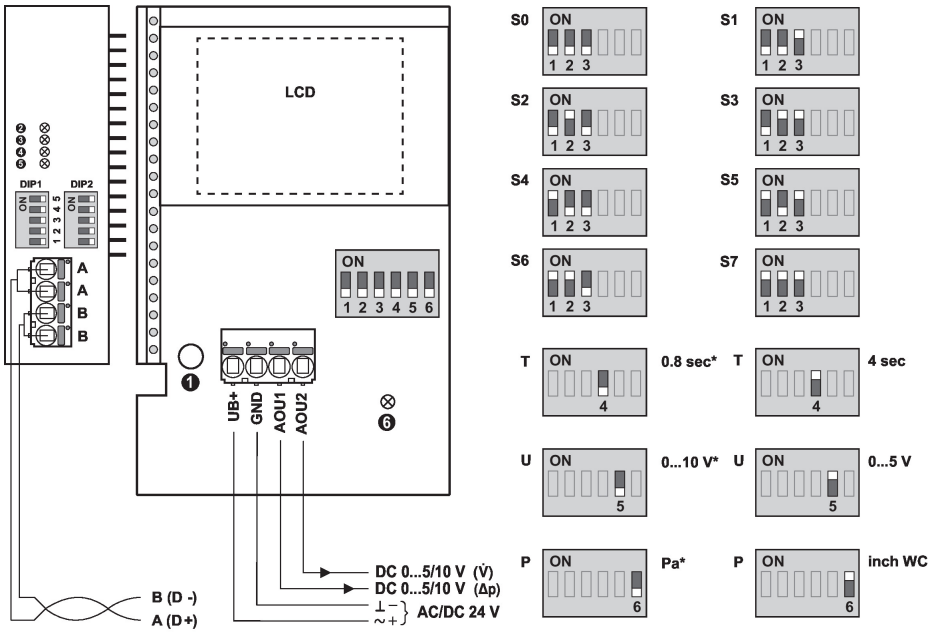

*del*Setting	Range [Pa]	Range [inch WC]	Factory setting	Synonyms
S0	0...7000	0...28	✔	
S1	0...5000	0...20		
S2	0...4000	0...16		
S3	0...3000	0...12		
S4	0...2500	0...10		
S5	0...2000	0...8		
S6	0...1500	0...6		
S7	0...1000	0...4		

Detailed documentation

The separate document Sensor Modbus-Register informs about Modbus register, addressing, parity and bus termination (DIP1: address, DIP2: baud rate, parity, bus termination)

In addition to the information on the bus, the following analogue outputs are available:

AOU1: differential pressure

AOU2: volumetric flow

The volumetric flow is calculated from the differential pressure, the k-factor and the height above sea level.

Factory setting for the k-factor is 1.00 and for the height above sea level 330 metres.

The values of the k-factor and the height can be changed via bus system.

Wiring RS-485 Modbus RTU

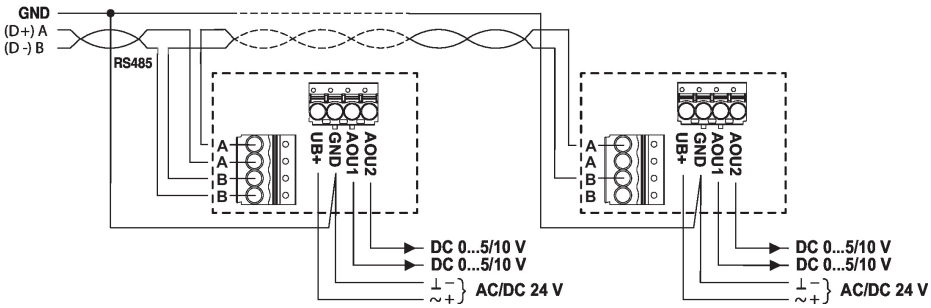

Dimensions

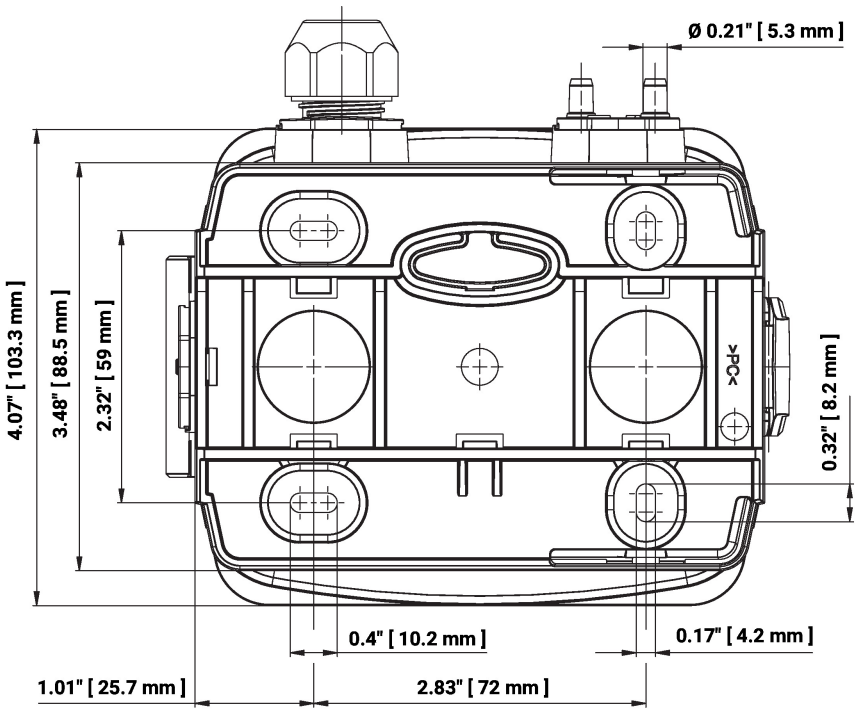

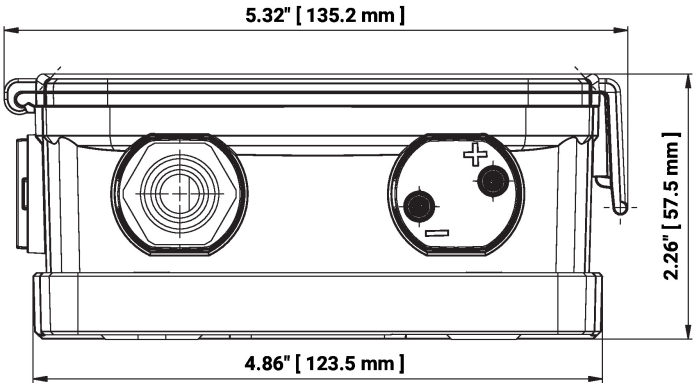

Type	Weight
22ADP-156	0.40 kg
22ADP-156L	0.41 kg

Further documentation

- Modbus Interface description
- Installation instructions