- Air damper size up to approx. 4 m²

- Torque motor 20 Nm
- Nominal voltage AC/DC 24 V
- Control modulating, communicative, hybrid, Cloud
- Communication via BACnet/IP, Modbus TCP and Cloud
- Ethernet 10/100 Mbit/s, TCP/IP, integrated web server
- Conversion of sensor signals

Picture may differ from product

Technical data

Electrical data	Nominal voltage	AC/DC 24 V
	Nominal voltage frequency	50/60 Hz
	Nominal voltage range	AC 19.2...28.8 V / DC 21.6...28.8 V
	Power consumption in operation	8.5 W
	Power consumption in rest position	3.5 W
	Power consumption for wire sizing	11 VA
	Connection supply / control	Cable 1 m, 6x 0.5 mm²
	Connection Ethernet	RJ45 socket
	Parallel operation	Yes (note the performance data)
Data bus communication	Communicative control	Cloud BACnet/IP Modbus TCP
	Number of nodes	BACnet / Modbus see interface description
Functional data	Torque motor	20 Nm
	Torque fail-safe	20 Nm
	Operating range Y	2...10 V
	Input impedance	34 kΩ
	Operating range Y variable	0.5...10 V
	Position accuracy	±5%
	Direction of motion motor	selectable with switch L/R
	Direction of motion fail-safe	selectable by mounting L/R
	Manual override	by means of hand crank and locking switch
	Angle of rotation	95°
	Angle of rotation note	adjustable starting at 33% in 2.5% steps (with mechanical end stop)
	Running time motor	150 s / 90°
	Running time motor variable	70...220 s
	Running time fail-safe	<20 s @ -20...50°C, <60 s @ -30°C
	Sound power level, motor	40 dB(A)
	Adaptation setting range	manual
	Mechanical interface	Universal shaft clamp 10...25.4 mm
	Position indication	Mechanical
	Service life	Min. 60'000 fail-safe positions
Safety data	Protection class IEC/EN	III, Safety Extra-Low Voltage (SELV)

Technical data

Safety data	Degree of protection IEC/EN	IP40 IP54 when using protective cap or protective grommet for RJ45 socket
	EMC	CE according to 2014/30/EU
	Hygiene test	According to VDI 6022 Part 1 / SWKI VA 104-01, cleanable and disinfectable, low emission
	Type of action	Type 1.AA
	Rated impulse voltage supply / control	0.8 kV
	Pollution degree	3
	Ambient humidity	Max. 95% RH, non-condensing
	Ambient temperature	-30...50°C [-22...122°F]
	Storage temperature	-40...80°C [-40...176°F]
	Servicing	maintenance-free
Weight	Weight	2.2 kg

Safety notes

- This device has been designed for use in stationary heating, ventilation and air-conditioning systems and must not be used outside the specified field of application, especially in aircraft or in any other airborne means of transport.
- Outdoor application: only possible in case that no (sea) water, snow, ice, insolation or aggressive gases interfere directly with the device and that it is ensured that the ambient conditions remain within the thresholds according to the data sheet at any time.
- Only authorised specialists may carry out installation. All applicable legal or institutional installation regulations must be complied with during installation.
- The device may only be opened at the manufacturer's site. It does not contain any parts that can be replaced or repaired by the user.
- Cables must not be removed from the device.
- To calculate the torque required, the specifications supplied by the damper manufacturers concerning the cross-section and the design, as well as the installation situation and the ventilation conditions must be observed.
- The device contains electrical and electronic components and must not be disposed of as household refuse. All locally valid regulations and requirements must be observed.

Product features

Operating mode

The actuator is controlled via the Cloud, BACnet/IP or Modbus TCP and drives to the position defined by the control signal. Various data points can be written and read via the same interfaces.

Hybrid mode:

The actuator receives its analogue control signal from the higher-level controller and drives to the position defined. Using the Cloud, BACnet/IP or Modbus TCP, various data points can be read and, with the exception of the control signal, written.

Converter for sensors

Connection option for two sensors (passive sensor, active sensor or switching contact). The actuator serves as an analogue/digital converter for the transmission of the sensor signal to the higher level system.

Product features

Communication

The configuration can be carried out through the integrated web server (RJ45 connection to the web browser), by communicative means or via the Cloud.

Additional information regarding the integrated web server can be found in the separate documentation.

"Peer to Peer" connection
http://belimo.local:8080
The Notebook must be set to "DHCP".
Make sure that only one network connection is active.
Standard IP address:
http://192.168.0.10:8080
Static IP address
Password (read-only):
User name: «guest»
Password: «guest»

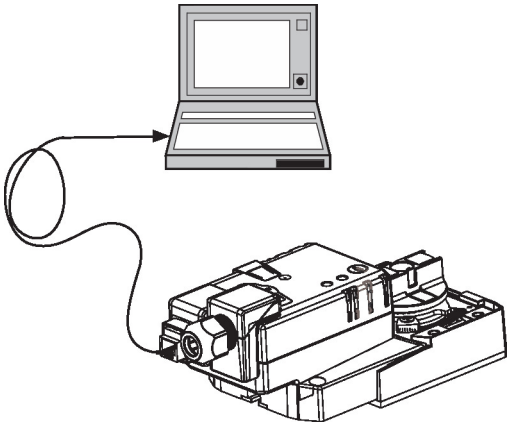

Simple direct mounting

Simple direct mounting on the damper shaft with a universal shaft clamp, supplied with an anti-rotation mechanism to prevent the actuator from rotating.

Data recording

The recorded data (integrated data recording for 13 months) can be used for analytical purposes.

Download csv files via web browser.

Manual override

By using the hand crank the damper can be actuated manually and engaged with the locking switch at any position. Unlocking is carried out manually or automatically by applying the operating voltage.

Adjustable angle of rotation

Adjustable angle of rotation with mechanical end stops.

High functional reliability

The actuator is overload protected, requires no limit switches and automatically stops when the end stop is reached.

Home position

The first time the supply voltage is switched on, i.e. at the time of commissioning, the actuator carries out an adaptation, which is when the operating range and position feedback adjust themselves to the mechanical setting range.

The actuator then moves into the position defined by the control signal.

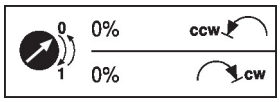

Adaptation and synchronisation

An adaptation can be triggered manually by pressing the "Adaptation" button. Both mechanical end stops are detected during the adaptation (entire setting range).

The actuator then moves into the position defined by the control signal.

Accessories

Tools

Description	Type
Service tool, with ZIP-USB function, for configurable and communicative Belimo actuators, VAV controller and HVAC performance devices	ZTH EU
Connecting cable 5 m, A: RJ11 6/4 LINK.10, B: 6-pin for connection to service socket	ZK1-GEN
Belimo Assistant Link Bluetooth and USB to NFC and MP-Bus converter for configurable and communicative devices	LINK.10

Electrical accessories

Description	Type
Grommet for RJ connection module, Multipack 50 pcs.	Z-STRJ.1

Electrical installation

Supply from isolating transformer.

Parallel connection of other actuators possible. Observe the performance data.

Wire colours:
1 = black
2 = red
5 = orange
10 = yellow/black
11 = yellow/pink
12 = yellow/grey

AC/DC 24 V

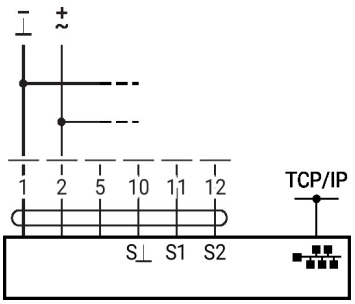

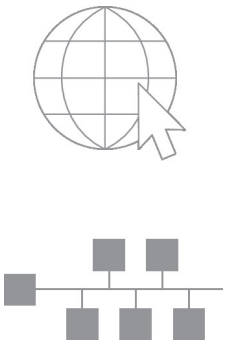

Optional connection via RJ45 (direct connection to notebook / connection via Intranet or Internet) for access to the integrated web server

Further electrical installations

The connection diagrams shows connections for the first sensor on terminal S1, while the second sensor can be connected identically on terminal S2.

Parallel use of different sensor types is permitted.

For hybrid operation, S1 is used for the control signal Y and must be configured as an active sensor.

Functions with specific parameters (configuration necessary)

TCP/IP (Cloud) / BACnet/IP / Modbus TCP

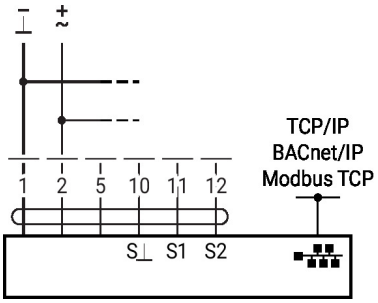

TCP/IP (Cloud) / BACnet/IP / Modbus TCP with analogue setpoint (hybrid operation)

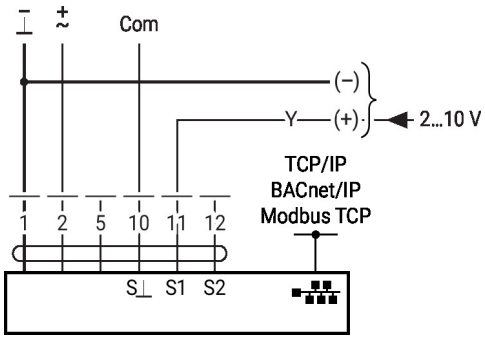

Further electrical installations

Sensor connection

Connection of active sensors

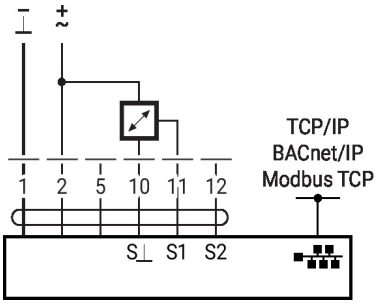

Switching contact connection

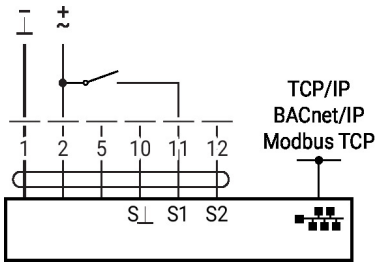

Connection of passive sensors

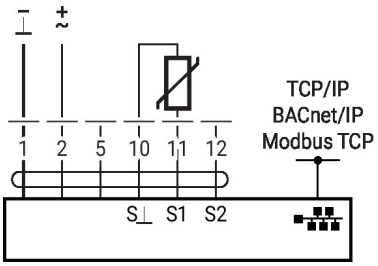

Dimensions

Spindle length

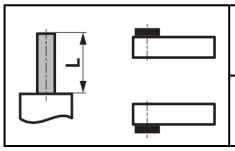	Min. 85
	Min. 15

Clamping range

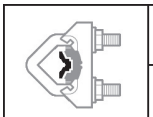	10...22	10	14...25.4
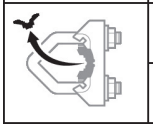	19...25.4	12...18	

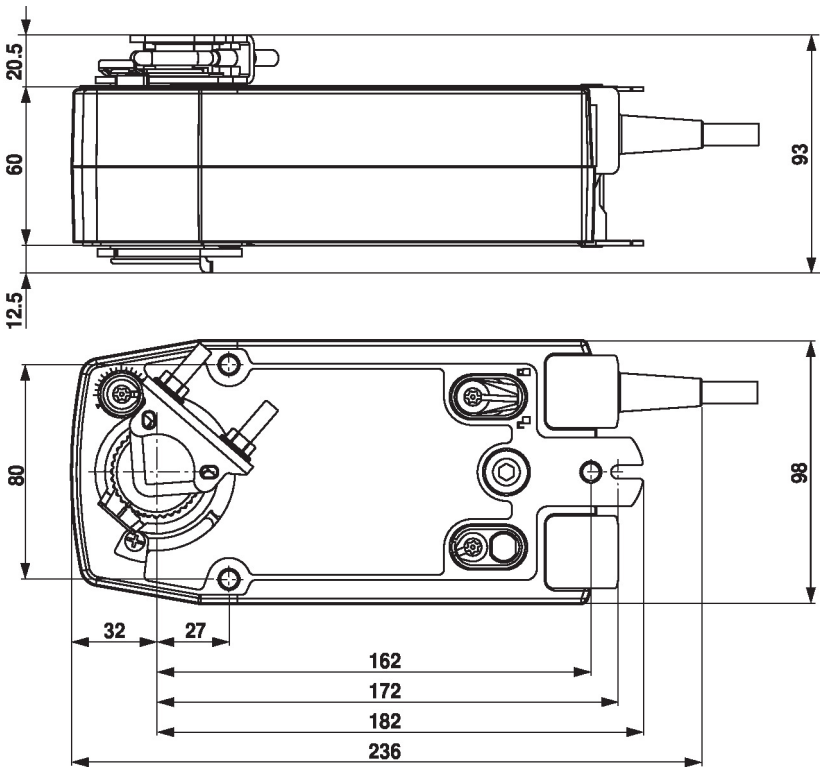

Further documentation

- General notes for project planning
- Instruction Webserver
- BACnet Interface description
- Modbus Interface description
- Description clientAPI

Application notes

- For digital control of actuators in VAV applications patent EP 3163399 must be considered.