Pipe connector for ball valve with external thread

- internal thread G to internal thread Rp
- incl. gasket

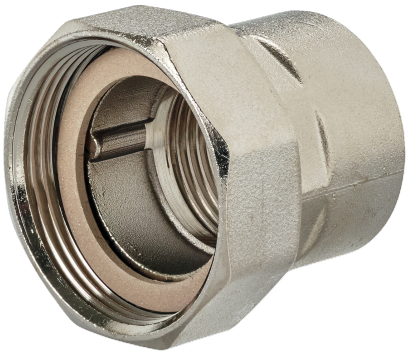

Picture may differ from product

Type Overview

Type	DN	G ["]	Rp ["]	B [mm]	Suitable for	Weight
ZR4510	10	3/4	3/8	24	R4.. / R5.. DN 10	0.060 kg
ZR4515	15	1	1/2	27	R4.. / R5.. DN 15	0.10 kg
ZR4520	20	1 1/4	3/4	31	R4.. / R5.. DN 20	0.18 kg
ZR4525	25	1 1/2	1	35	R4.. / R5.. DN 25	0.28 kg
ZR4532	32	2	1 1/4	40	R4.. / R5.. DN 32	0.38 kg
ZR4540	40	2 1/4	1 1/2	42	R4.. / R5.. DN 40	0.45 kg
ZR4550	50	2 3/4	2	44	R4.. / R5.. DN 50	0.69 kg

Technical data

Materials	Used materials	Nickel-plated brass

Safety notes

- This accessory has been designed for use in stationary heating, ventilation and air-conditioning systems and must not be used outside the specified field of application, especially in aircraft or in any other airborne means of transport.
- Only authorised specialists may carry out installation. All applicable legal or institutional installation regulations must be complied with during installation.
- The accessory may not be disposed of as household refuse. All locally valid regulations and requirements must be observed.

General notes

Delivery notes In the scope of delivery: union nut (G thread), insert (Rp thread), gasket

Dimensions
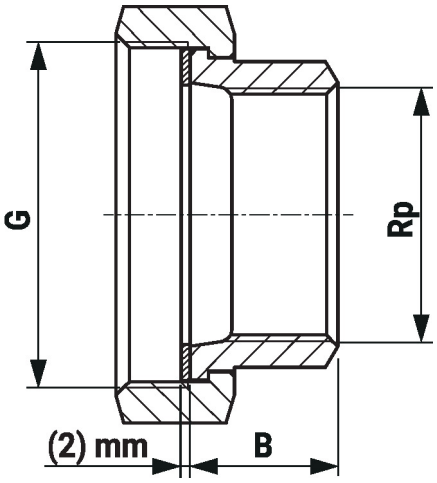
Dimensional drawings