Modulating short-stroke actuator for the motorisation of Siemens short-stroke globe valves in HVAC systems

- Actuating force 500 N
- Nominal voltage AC/DC 24 V
- Control modulating 0...10 V
- Stroke 5.5 mm

Picture may differ from product

Technical data

Electrical data	Nominal voltage	AC/DC 24 V
	Nominal voltage frequency	50/60 Hz
	Nominal voltage range	AC 19.2...28.8 V / DC 21.6...28.8 V
	Power consumption in operation	1 W
	Power consumption for wire sizing	2.5 VA
	Connection supply / control	Terminals 4 mm² (cable ø6...8 mm, 4-wire)
	Parallel operation	Yes (note the performance data)
Functional data	Actuating force motor	500 N
	Operating range Y	0...10 V
	Input impedance	100 kΩ
	Operating range Y variable	2...10 V
	Position feedback U	0...10 V
	Position feedback U note	Max. 1 mA
	Position accuracy	±5%
	Manual override	temporary and permanent gear train disengagement with rotary knob on the housing
	Stroke	5.5 mm
	Actuator fixing	G 3/4"
	Running time motor	35 s / 5.5 mm
	Sound power level, motor	45 dB(A)
	Duty cycle value	75% (= active time 35 s / operating time 47 s)
	Position indication	Reversible scale plate
Safety data	Protection class IEC/EN	III, Safety Extra-Low Voltage (SELV)
	Degree of protection IEC/EN	IP40
	EMC	CE according to 2014/30/EU
	Type of action	Type 1
	Rated impulse voltage supply / control	0.8 kV
	Pollution degree	3
	Ambient humidity	Max. 95% RH, non-condensing
	Ambient temperature	0...50°C [32...122°F]
	Storage temperature	-30...80°C [-22...176°F]
	Servicing	maintenance-free
Weight	Weight	0.35 kg
Housing colours	Housing cover	orange
	Housing base	black

Safety notes

- This device has been designed for use in stationary heating, ventilation and air-conditioning systems and must not be used outside the specified field of application, especially in aircraft or in any other airborne means of transport.
- Only authorised specialists may carry out installation. All applicable legal or institutional installation regulations must be complied with during installation.
- The actuator is to be protected against moisture. It is not suitable for outdoor applications.
- The device does not contain any parts that can be replaced or repaired by the user.
- The device contains electrical and electronic components and must not be disposed of as household refuse. All locally valid regulations and requirements must be observed.
- The correct functioning of the strain relief for the cable in the actuator housing is to be checked.

Product features

Operating mode The actuator is connected with an analogue control signal Y (note the operating range) and drives to the position defined.

Simple direct mounting Straightforward direct mounting on the valve with one knurled nut.

Manual override Manual override with lever possible. Temporary gear train disengagement by pushing the rotary knob. Permanent disengagement by pushing and simultaneous rotating the rotary knob clockwise 90°.

High functional reliability The actuator is overload protected and automatically stops when the end stop is reached.

Electrical installation

Supply from isolating transformer.
Parallel connection of other actuators possible. Observe the performance data.
The actuator is connected with an analogue control signal Y (note the operating range).

AC/DC 24 V, modulating

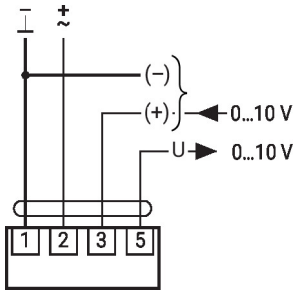

Operating controls and indicators

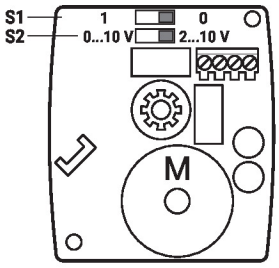

S1		
0	0	Y = 0%
1	1	Y = 0%

S2	
2...10 V	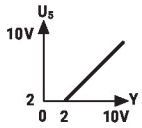
0...10 V	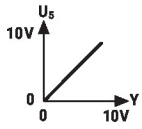
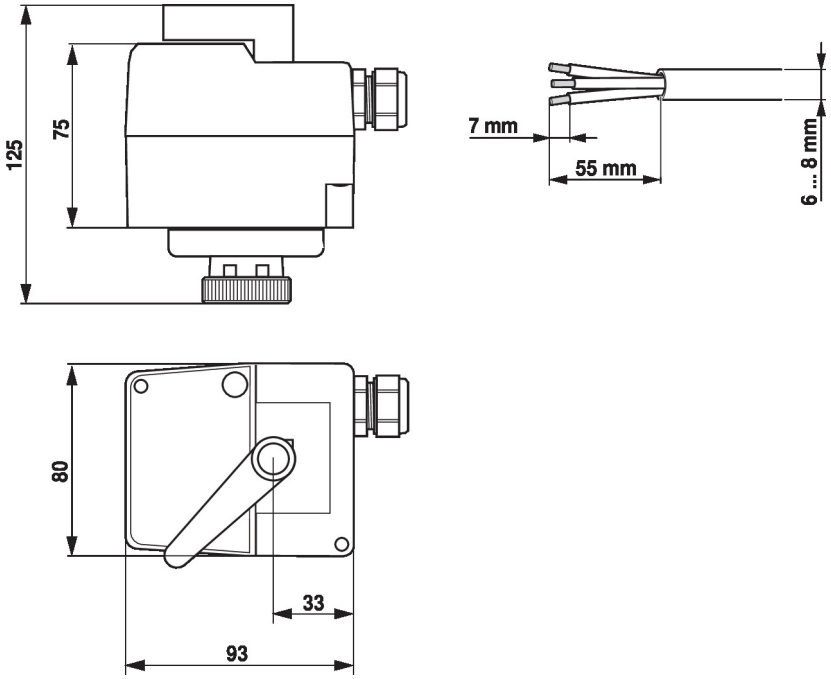
Dimensions