Expansion valve

- With integrated superheat controller
- Feedback signal: Modbus or analogue 0...10 V
- Suitable for safety class A3 refrigerants (ISO 817)
- Suitable for CFC, HFC, HFO and R290 refrigerants
- Tight-closing

Picture may differ from product

Type Overview

Type	Cooling output	ODF	PN
X8016M.113A4	100 kW	16-16 mm	50
X8016M.213A4	200 kW	16-16 mm	50
X8022M.323A4	500 kW	22-22 mm	50
X8028M.1A3A4	100 kW	28-28 mm	50
X8028M.2A3A4	200 kW	28-28 mm	50
X8035M.2A3A4	200 kW	35-35 mm	50
X8042M.3B3A4	500 kW	42-42 mm	50

With R134a @ Tc = 50°C, Te = 5°C, SC = SH = 5 K

Technical data

Electrical data	Nominal voltage	AC/DC 24 V
	Nominal voltage frequency	50/60 Hz
	Nominal voltage range	AC 21.6...28.8 V / DC 21.6...28.8 V
	Power consumption in operation	1.5 W
	Power consumption for wire sizing	2.6 VA
	Connection supply / control	Cables not included in scope of delivery; use Belimo cables Z-C24X4.. only
Functional data	Running time motor	20 s / 90°
	Configuration	via smartphone via xBALL Syncra App via radio interfacing
	Fluid	CFC, HFC, HFO, R290
	Fluid temperature	-20...70°C [-4...158°F]
	Fluid temperature note	with ZCQ-E 70...120°C [158...248°F]
	Differential pressure Δpmax	3500 kPa
	Flow characteristic	equal percentage (VDI/VDE 2178)
	Leakage rate	air-bubble tight, leakage rate A (EN 12266-1)
	Pipe connection	Internal soldering sleeve ODF
	Installation orientation	upright to horizontal (in relation to the spindle)
	Servicing	maintenance-free
	Manual override	with actuator (clicked out)
Safety data	Protection class IEC/EN	III, Safety Extra-Low Voltage (SELV)
	Degree of protection IEC/EN	IP54
	RED	CE according to 2014/53/EU
	Type of action	Type 1
	Rated impulse voltage supply / control	0.8 kV
	Pollution degree	2

Technical data

Safety data	Compatible refrigerants	R1233zd(e), R1234yf, R1234ze, R1270, R134a, R290, R32, R404a, R407A, R407c, R410a, R449A, R449C, R452A, R452B, R454A, R454B, R454C, R463A, R507a, R513A, R514A, R515B, R600, R600a, R744
	Flammable refrigerants	The product is not to be considered a source of ignition when used together with A2L and A3 classified refrigerants and is compliant with clauses 22.116 and 22.117 from IEC 60335-2-40. Compliance with clause 22.117 has been checked by measuring the appropriate surface temperatures during the tests of IEC 60335-2-40, clauses 11 and clauses 19. The maximum surface temperature of the devices and components did not exceed the temperature limit of 370°C.
	Ambient humidity	Max. 95% RH, non-condensing
	Ambient temperature	-30...50°C [-22...122°F]
	Ambient temperature note	Without radiation
	Storage temperature	-40...80°C [-40...176°F]
Materials	Valve body	Brass CW617N
	Closing element	Stainless steel AISI 316L
	Spindle	Stainless steel AISI 316L or chrome-plated brass
	Spindle seal	HNBR O-ring

Safety notes

- This device has been designed for use in refrigeration application, stationary heating, ventilation and air conditioning systems and must not be used outside the specified field of application, especially in aircraft, any other airborne means of transport or explosive atmosphere.
- Outdoor application: Only possible if no (sea) water, snow, ice, sunlight or aggressive gases act directly on the device and if it is ensured that the ambient conditions remain within the limit values specified in the data sheet at all times.
- Only authorised specialists may carry out installation. All applicable legal or institutional installation regulations must be complied with during installation.
- The device may only be opened at the manufacturer's site. It does not contain any parts that can be replaced or repaired by the user.
- Cables must not be removed from the device.
- The device contains electrical and electronic components and must not be disposed of as household refuse. All locally valid regulations and requirements must be observed.
- The valve has been designed for use in stationary electrical heat pumps, air-conditioning systems and dehumidifiers and must not be used outside the specified field of application, especially in aircraft or in any other airborne means of transport.
- The suitability of these products for applications in which flammable refrigerants are used must be checked by the user for each individual application. Any application is the sole responsibility of the user.
- The valve does not contain any parts that can be replaced or repaired by the user.
- The valve may not be disposed of as household refuse. All locally valid regulations and requirements must be observed.

Product features

Operating mode The ball valve is adjusted by a rotary actuator.

The ball valve is opened in a counterclockwise direction and closed in a clockwise direction.

Product features

First start-up

The fundamental parameters to be set for the first start-up are:

- Measuring system
- Refrigerant type
- Mode (A/D or bus)
- Pressure probe type (electronic 4...20 mA or ratiometric 0...5 V)
- Enable regulation (REG_EN)

If the process has not been completed before, upon first connection with the xBALL electronic valve, xBALL Syncra presents a guided and reduced menu to lead the user through the configuration.

Electrical installation

Supply from isolating transformer.

Parallel connection of other actuators possible. Observe the performance data.

Wire colours:
1 = black
3 = red
2 = brown
4 = orange
5 = yellow

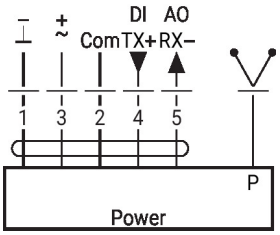

P = Probe
TX+ = Control (digital)
DI = Control (analogue)
RX- = Control (digital)
AO = Control (analogue)

Operating controls and indicators

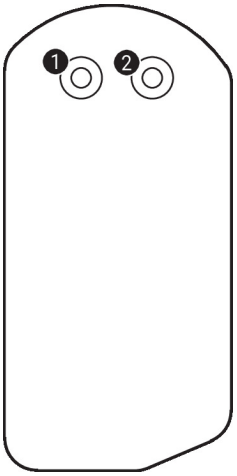

1 Power – Connector socket for power supply and refrigeration machine controller

2 Probe – Connector socket for pressure and temperature probes

LED displays

LED	Meaning / function
Off	No power
Only LED under the connectors on	Device powered and valve closed
On, 2 at a time according to the direction of motion	Opening / closing
All on	Device starting up
All flashing	Radio connection in progress
Flashing on the two extremes	Alarm (manual positioner left active with app connection missing or with hardware malfunction)

Installation notes

Permissible installation orientation

The ball valve can be installed upright to horizontal. The ball valve may not be installed in a hanging position, i.e. with the spindle pointing downwards.

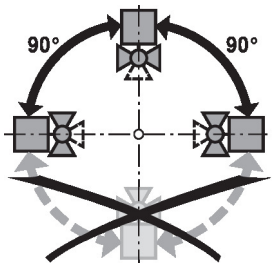

Installation situation

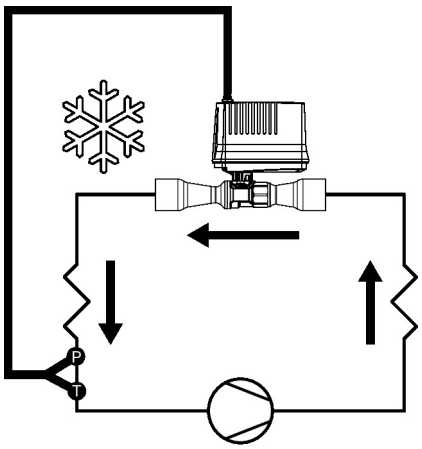

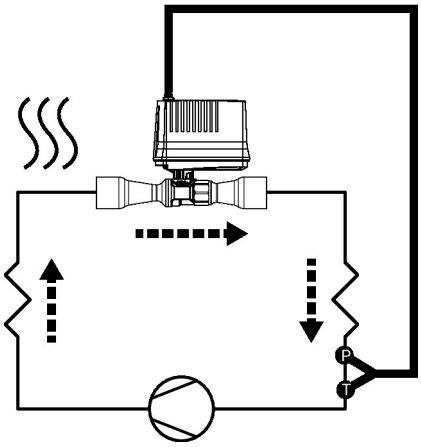

Servicing

Ball valves and rotary actuators are maintenance-free.

Before any service work on the control element is carried out, it is essential to isolate the rotary actuator from the power supply (by unplugging the electrical cable if necessary). The operating conditions of the refrigerant circuit and its components must be observed.

Flow direction

Direction of flow in both directions possible.

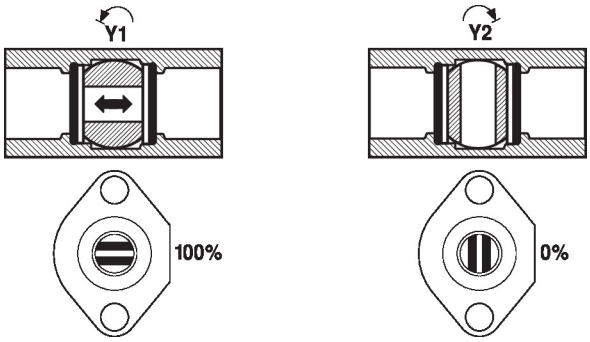

General notes

Valve selection Belimo recommends its sizing software, which can be downloaded free of charge from the Belimo website.

Dimensions

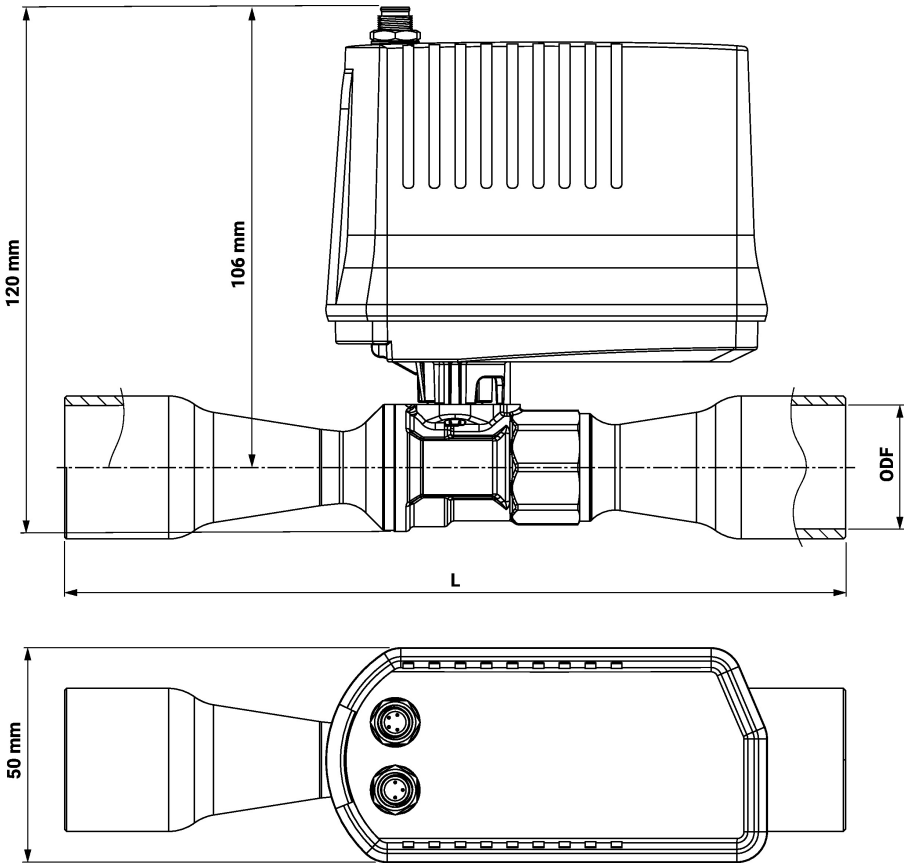

Type	L [mm]	ODF	Weight
X8016M.113A4	180	16-16 mm	0.57 kg
X8016M.213A4	180	16-16 mm	0.59 kg
X8022M.323A4	190	22-22 mm	0.68 kg
X8028M.1A3A4	180	28-28 mm	0.69 kg
X8028M.2A3A4	180	28-28 mm	0.79 kg
X8035M.2A3A4	180	35-35 mm	0.88 kg
X8042M.3B3A4	190	42-42 mm	0.97 kg