Modulating rotary actuator fail-safe for adjusting dampers in technical building installations

- Air damper size up to approx. 2 m²
- Torque motor 10 Nm
- Nominal voltage AC/DC 24 V
- Control modulating 0.5...10 V
- Position feedback 0.5...10 V
- With 2 integrated auxiliary switches

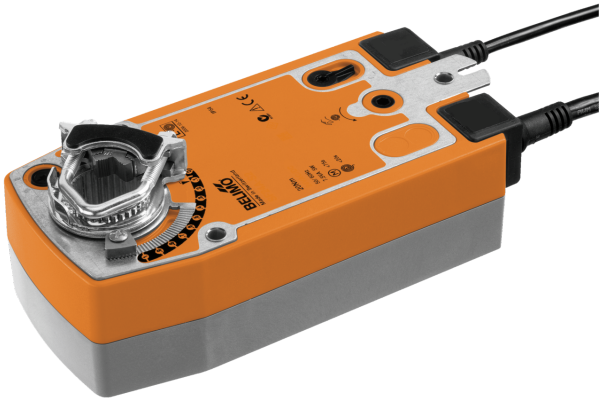

Picture may differ from product

Technical data

Electrical data	Nominal voltage	AC/DC 24 V
	Nominal voltage frequency	50/60 Hz
	Nominal voltage range	AC 19.2...28.8 V / DC 21.6...28.8 V
	Power consumption in operation	2.9 W
	Power consumption in rest position	1.1 W
	Power consumption for wire sizing	4.7 VA
	Auxiliary switch	2x SPDT, 1x 10% / 1x 11...100%
	Switching capacity auxiliary switch	1 mA...3 A (0.5 A inductive), DC 5 V...AC 250 V
	Connection supply / control	Cable 1 m, 4x 0.75 mm²
	Connection auxiliary switch	Cable 1 m, 6x 0.75 mm²
	Parallel operation	Yes (note the performance data)
Functional data	Torque motor	10 Nm
	Torque fail-safe	10 Nm
	Operating range Y	0.5...10 V
	Input impedance	100 kΩ
	Position feedback U	0.5...10 V
	Position feedback U note	Max. 0.5 mA
	Position accuracy	±5%
	Direction of motion motor	selectable with switch L/R
	Direction of motion fail-safe	selectable by mounting L/R
	Manual override	by means of hand crank and locking switch
	Angle of rotation	Max. 95°
	Angle of rotation note	adjustable starting at 33% in 2.5% steps (with mechanical end stop)
	Running time motor	150 s / 90°
	Running time fail-safe	<20 s @ -20...50°C, <60 s @ -30°C
	Sound power level motor	40 dB(A)
	Mechanical interface	Universal shaft clamp 10...25.4 mm
	Position indication	Mechanical
	Service life	Min. 60'000 fail-safe positions
Safety data	Protection class IEC/EN	III, Safety Extra-Low Voltage (SELV)
	Power source UL	Class 2 Supply
	Protection class auxiliary switch IEC/EN	II, reinforced insulation
	Degree of protection IEC/EN	IP54
	Degree of protection NEMA/UL	NEMA 2
	Housing	UL Enclosure Type 2
	EMC	CE according to 2014/30/EU
	Low voltage directive	CE according to 2014/35/EU

Technical data

Safety data	Certification IEC/EN	IEC/EN 60730-1 and IEC/EN 60730-2-14
	UL Approval	cULus according to UL60730-1A, UL60730-2-14 and CAN/CSA E60730-1 The UL marking on the actuator depends on the production site, the device is UL-compliant in any case
	Hygiene test	According to VDI 6022 Part 1
	Type of action	Type 1.AA.B
	Rated impulse voltage supply / control	0.8 kV
	Rated impulse voltage auxiliary switch	2.5 kV
	Pollution degree	3
	Ambient humidity	Max. 95% RH, non-condensing
	Ambient temperature	-30...50°C [-22...122°F]
	Storage temperature	-40...80°C [-40...176°F]
	Servicing	maintenance-free
Weight	Weight	2.2 kg

Safety notes

- This device has been designed for use in stationary heating, ventilation and air-conditioning systems and must not be used outside the specified field of application, especially in aircraft or in any other airborne means of transport.
- Outdoor application: Only possible if no (sea) water, snow, ice, sunlight or aggressive gases act directly on the device and if it is ensured that the ambient conditions remain within the limit values specified in the data sheet at all times.
- Only authorised specialists may carry out installation. All applicable legal or institutional installation regulations must be complied with during installation.
- The device may only be opened at the manufacturer's site. It does not contain any parts that can be replaced or repaired by the user.
- Cables must not be removed from the device.
- To calculate the torque required, the specifications supplied by the damper manufacturers concerning the cross-section and the design, as well as the installation situation and the ventilation conditions must be observed.
- The device contains electrical and electronic components and must not be disposed of as household refuse. All locally valid regulations and requirements must be observed.
- The two switches integrated in the actuator are to be operated either on mains voltage or on safety extra-low voltage. The combination mains voltage/safety extra-low voltage is not permitted.

Product features

Operating mode
The actuator is controlled with a control signal Y (note the operating range) and drives the damper to the operating position at the same time as tensioning the return spring. The damper is turned back to the fail-safe position by spring force when the supply voltage is interrupted.

Simple direct mounting
Simple direct mounting on the damper shaft with a universal shaft clamp, supplied with an anti-rotation mechanism to prevent the actuator from rotating.

Manual override
By using the hand crank the damper can be actuated manually and engaged with the locking switch at any position. Unlocking is carried out manually or automatically by applying the operating voltage.

Adjustable angle of rotation
Adjustable angle of rotation with mechanical end stops.

High functional reliability
The actuator is overload protected, requires no limit switches and automatically stops when the end stop is reached.

Product features

Innovative motorisation
The actuator uses the powerful Belimo M600 microchip in combination with the INFORM method. It provides the full starting torque from a standstill with high precision (sensorless INFORM-Drive by Prof. Schrödl).

Flexible signalling
The actuator has one auxiliary switch with a fixed setting and one adjustable auxiliary switch. They permit a 10% or 11...100% angle of rotation to be signaled.

Accessories

Electrical accessories

Description	Type
Auxiliary switch 2x SPDT	S2A-F
Feedback potentiometer 1 kΩ	P1000A-F
Signal converter voltage/current 100 kΩ 4...20 mA, Supply AC/DC 24 V	Z-UIC
Positioner for wall mounting	SGA24
Positioner for built-in mounting	SGE24
Positioner for front-panel mounting	SGF24
Positioner for wall mounting	CRP24-B1

Mechanical accessories

Description	Type
Shaft extension 240 mm ø20 mm for damper shaft ø8...22.7 mm	AV8-25
End stop indicator	IND-AFB
Shaft clamp reversible, for central mounting, for damper shafts ø12.7 / 19.0 / 25.4 mm	K7-2
Ball joint suitable for damper crank arm KH8 / KH10	KG10A
Ball joint suitable for damper crank arm KH8	KG8
Damper crank arm Slot width 8.2 mm, clamping range ø10..18 mm [3/8...3/4"]	KH8
Actuator arm, for 3/4" shafts, clamping range ø10..22 mm [3/8...7/8"], Slot width 8.2 mm	KH-AFB
Form fit insert 10x10 mm, Multipack 20 pcs.	ZF10-NSA-F
Form fit insert 12x12 mm, Multipack 20 pcs.	ZF12-NSA-F
Form fit insert 15x15 mm, Multipack 20 pcs.	ZF15-NSA-F
Form fit insert 16x16 mm, Multipack 20 pcs.	ZF16-NSA-F
Mounting kit for linkage operation for flat and side installation	ZG-AFB
Baseplate extension	Z-SF
Anti-rotation mechanism 230 mm, Multipack 20 pcs.	Z-ARS230L
Hand crank 63 mm	ZKN2-B

Electrical installation

Supply from isolating transformer.

Parallel connection of other actuators possible. Observe the performance data.

The cable cross-section (mm²) must be determined on the basis of the actuator performance data (VA, W), the cable resistance, the number of actuators, and the total cable length according to electrotechnical principles. High voltage drops across the installation cables can affect the function of the actuator if, for example, the nominal voltage range (AC/DC) is not respected.

High voltage drops across the control signal and position feedback lines (Y/U) with respect to ground affect the signal values (0.5/2...10 V) and can change the actuator position.

Wire colours:
1 = black
2 = red
3 = white
5 = orange
S1 = violet
S2 = red
S3 = white
S4 = orange
S5 = pink
S6 = grey

Electrical installation

AC/DC 24 V, modulating

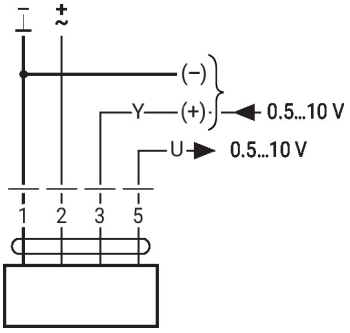

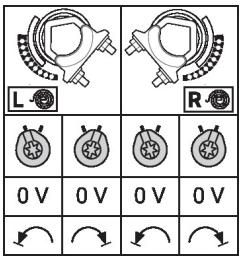

Auxiliary switch

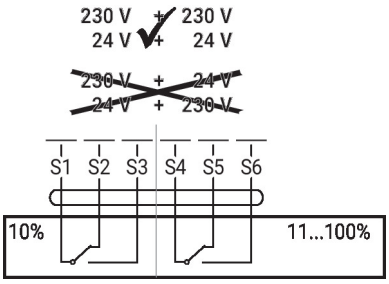

Operating controls and indicators

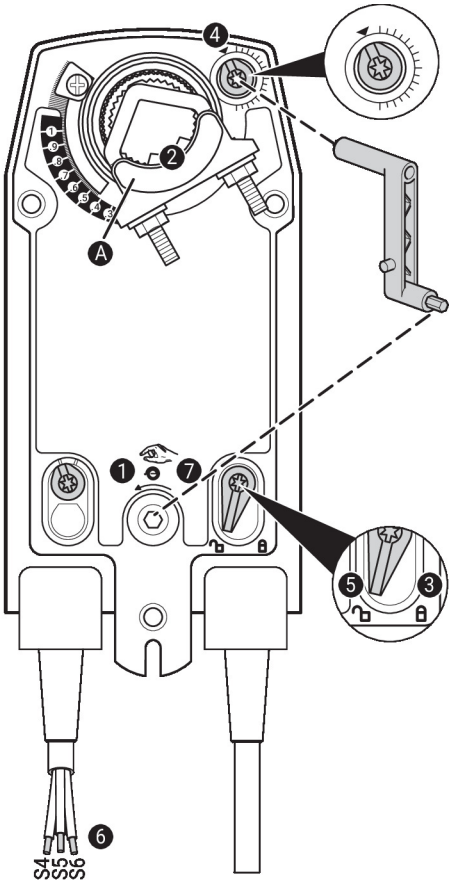

Auxiliary switch settings

Note: Perform settings on the actuator only in deenergised state.

For the auxiliary switch position settings, carry out points 1 to 7 successively.

1. **Manual override**
   Turn the hand crank until the desired switching position is set.
2. **Shaft clamp**
   Edge line A displays the desired switching position of the actuator on the scale.
3. **Fasten the locking device**
   Turn the locking switch to the „Locked padlock“ symbol.
4. **Auxiliary switch**
   Turn rotary knob until the notch points to the arrow symbol.
5. **Unlock the locking device**
   Turn the locking switch to the „Unlocked padlock“ symbol or unlock with the hand crank.
6. **Cable**
   Connect continuity tester to S4 + S5 or to S4 + S6.
7. **Manual override**
   Turn the hand crank until the desired switching position is set and check whether the continuity tester shows the switching point.

Dimensions

Shaft length

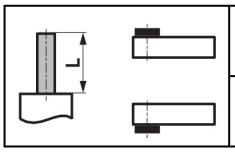	Min. 85
	Min. 15

Clamping range

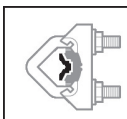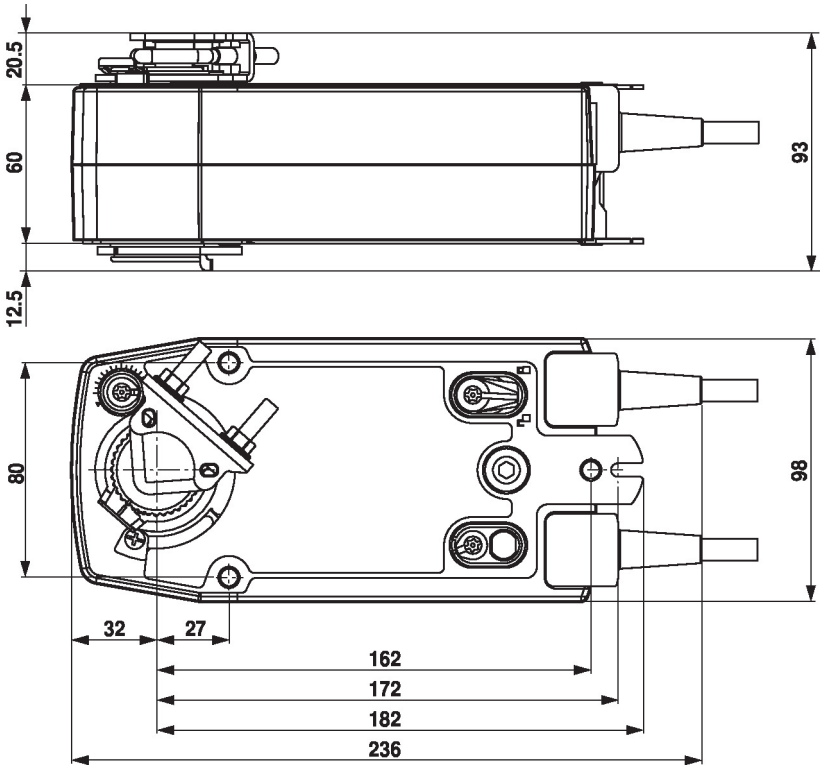	○	□	◇
	10...22	10	14...25.4
	○	□	
	19...25.4	12...18