Modulating damper actuator for adjusting dampers in technical building installations

- Air damper size up to approx. 0.4 m²
- Torque motor 2 Nm
- Nominal voltage AC/DC 24 V
- Control modulating 2...10 V
- Position feedback 2...10 V

Picture may differ from product

Technical data

Electrical data	Nominal voltage	AC/DC 24 V
	Nominal voltage frequency	50/60 Hz
	Nominal voltage range	AC 19.2...28.8 V / DC 19.2...28.8 V
	Power consumption in operation	1 W
	Power consumption in rest position	0.5 W
	Power consumption for wire sizing	1.5 VA
	Connection supply / control	Cable 1 m, 4x 0.75 mm²
	Parallel operation	Yes (note the performance data)
Functional data	Torque motor	2 Nm
	Operating range Y	2...10 V
	Input impedance	100 kΩ
	Position feedback U	2...10 V
	Position feedback U note	Max. 1 mA
	Position accuracy	±5%
	Direction of motion motor	counter-clockwise rotation (ccw)
	Direction of motion note	Y = 0 V: left end stop, position 0
	Manual override	with magnet
	Angle of rotation	0...287.5°
	Angle of rotation note	fixed or 0...287.5° with two end stop clips mounted on the actuator, adjustable in 2.5° increments 315° with one end stop clip mounted on the actuator Max. 3600°, limited by two mechanical end stops on-site application
	Running time motor	75 s / 90°
	Sound power level, motor	35 dB(A)
	Adaptation setting range	manual with magnet (automatic on first power-up)
	Mechanical interface	Universal shaft clamp 6...12.7 mm
	Position indication	Mechanical, pluggable (with integrated magnet for gear train disengagement)
Safety data	Protection class IEC/EN	III, Safety Extra-Low Voltage (SELV)
	Power source UL	Class 2 Supply
	Degree of protection IEC/EN	IP54
	Degree of protection NEMA/UL	NEMA 2
	Housing	UL Enclosure Type 2
	EMC	CE according to 2014/30/EU

Technical data

Safety data	Certification IEC/EN	IEC/EN 60730-1 and IEC/EN 60730-2-14
	Hygiene test	According to VDI 6022 Part 1 / SWKI VA 104-01, cleanable and disinfectable, low emission
	Type of action	Type 1
	Rated impulse voltage supply / control	0.8 kV
	Pollution degree	3
	Ambient humidity	Max. 95% RH, non-condensing
	Ambient temperature	-30...50°C [-22...122°F]
	Storage temperature	-40...80°C [-40...176°F]
	Servicing	maintenance-free
Weight	Weight	0.21 kg

Safety notes

- This device has been designed for use in stationary heating, ventilation and air-conditioning systems and must not be used outside the specified field of application, especially in aircraft or in any other airborne means of transport.
- Outdoor application: only possible in case that no (sea) water, snow, ice, insolation or aggressive gases interfere directly with the device and that it is ensured that the ambient conditions remain within the thresholds according to the data sheet at any time.
- Only authorised specialists may carry out installation. All applicable legal or institutional installation regulations must be complied with during installation.
- The mechanical end stops for limiting the angle of rotation may only be removed for adjustment. They must always be mounted during operation.
- The device may only be opened at the manufacturer's site. It does not contain any parts that can be replaced or repaired by the user.
- Cables must not be removed from the device.
- To calculate the torque required, the specifications supplied by the damper manufacturers concerning the cross-section and the design, as well as the installation situation and the ventilation conditions must be observed.
- The device contains electrical and electronic components and must not be disposed of as household refuse. All locally valid regulations and requirements must be observed.

Product features

Operating mode

The actuator is controlled with a control signal Y (note the operating range) and drives to the position defined by the control signal. Measuring voltage U serves for the electrical display of the damper position 0...100% and as control signal for other actuators.

Simple direct mounting

The actuator is mounted directly on the damper shaft (ø6...12.7 mm) with a universal shaft clamp and then secured with the anti-rotation clip, to prevent it from rotating.

The anti-rotation clip Z-ARCM is included in the scope of delivery.

Manual override

Manual override with magnet possible (the gear train is disengaged as long as the magnet adheres to the magnet symbol). The magnet for gear train disengagement is integrated in the position indicator.

After a manual override, it is mandatory that an adaptation via magnet be triggered at the position intended for this purpose.

Adjustable angle of rotation

Adjustable angle of rotation with mechanical end stops.

High functional reliability

The actuator is overload protected, requires no limit switches and automatically stops when the end stop is reached.

Product features

Home position

The first time the supply voltage is switched on, i.e. at the time of commissioning, the actuator carries out an adaptation, which is when the operating range and position feedback adjust themselves to the mechanical setting range.

The actuator then moves into the position defined by the control signal.

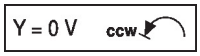

Adaptation and synchronisation

An adaptation can be triggered manually through use of the magnet at the position intended for this purpose.

The actuator then moves into the position defined by the control signal.

Hidden synchronisation

If the actuator drives to the lower end stop during ongoing operation, it performs a synchronisation of the control signal at DC 2 V. This ensures that the signal range also corresponds to the effective functional range in ongoing operation. The bottom end stop is actively approached as soon as the control signal is <DC 2.1 V. The actuator drives to the new specified position as soon as the control signal is once again >DC 2.3 V.

Accessories

Mechanical accessories

Description	Type
Anti-rotation clip, Multipack 20 pcs.	Z-ARCM
Gear train disengagement magnet, Multipack 20 pcs.	Z-MA
Position indicator, Multipack 20 pcs.	Z-PICM
End stop clip, Multipack 20 pcs.	Z-ESCM
Shaft extension 170 mm ø10 mm for damper shaft ø6...16 mm	AV6-20

Electrical installation

Supply from isolating transformer.

Parallel connection of other actuators possible. Observe the performance data.

Wire colours:
1 = black
2 = red
3 = white
5 = orange

AC/DC 24 V, modulating

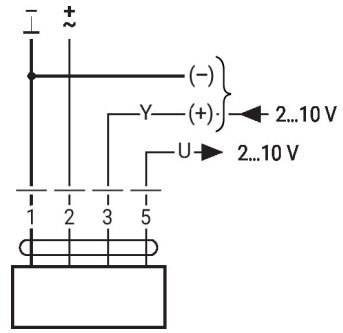

1	2	3	
		2 V	
		10 V	

Dimensions

Spindle length

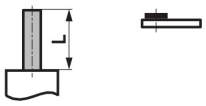	Min. 32
	-

Clamping range
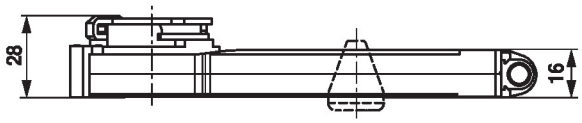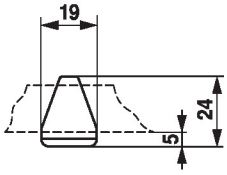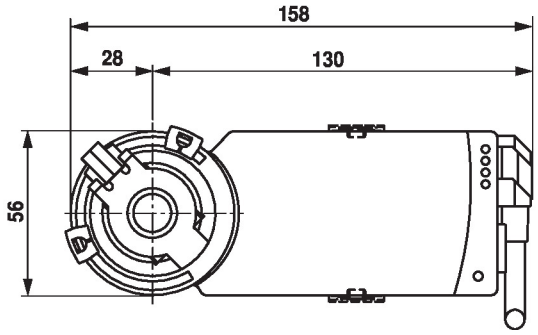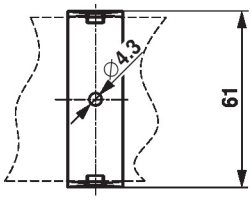
6...12.7	6 / 8 / 10	6...12.7